146 U.S. 524

RECORD, CASE No. 13,628.

SUPREME COURT OF THE UNITED STATES.

OCTOBER TERM, 1891.

TERM No., ~~410~~. 52

HERMAN ROYER, APPELLANT,

vs.

WILLIAM COUPE AND EDWIN A. BURGESS, COPARTNERS UNDER THE NAME AND STYLE OF WILLIAM COUPE & COMPANY.

APPEAL FROM THE CIRCUIT COURT OF THE UNITED STATES FOR THE DISTRICT OF MASSACHUSETTS.

FILED SEPTEMBER 7, 1889.

RECORD, CASE No. 13,628.

SUPREME COURT OF THE UNITED STATES.

OCTOBER TERM, 1891.

TERM No., 410.

HERMAN ROYER, APPELLANT,

vs.

WILLIAM COUPE AND EDWIN A. BURGESS, COPARTNERS UNDER THE NAME AND STYLE OF WILLIAM COUPE & COMPANY.

APPEAL FROM THE CIRCUIT COURT OF THE UNITED STATES FOR THE DISTRICT OF MASSACHUSETTS.

INDEX.

	Original.	Print.
Caption	1	1
Bill of complaint	2	1
Answer	4	3
Replication	8	6
Final decree	9	7
Allowance of appeal	9	7
Evidence for complainant	10	7
Exhibit offered	10	7
Deposition of William Coupe	10	8
Exhibit offered	15	12
Statement of William Coupe	15	12
Deposition of Herman Royer	16	13
Evidence for defendants	54	41
Deposition of William Coupe	54	41
David McKelvey	119	89

JUDD & DETWEILER, PRINTERS, WASHINGTON, D. C., APRIL 21, 1892.

	Original.	Print.
Deposition of Lemuel Higbee	125	93
W. F. Wiley	128	96
Samuel A. Johnson	130	97
John O'Shea	131	98
George J. Winchester	132	98
Joseph A. Miller	134	100
Exhibits offered	158	118
Evidence for complainant in reply	160	118
Deposition of Adolph Sommer	160	118
Christian Hellwig	167	124
Max Ott	173	128
Jacob William Fennel	177	131
James Mullen	182	135
James Mullen (recalled)	188	139
Nathan W. Spaulding	191	141
Max Ott (recalled)	194	143
James Patterson	195	144
Herman Royer	198	147
William Coupe	220	162
Exhibit W—Extracts from defendants' business circular	233	172
Deposition of C. Tennant Lee	236	174
Further evidence for defendants	251	185
Deposition of Walton C. Tiffany	251	185
Exhibit Royer File-Wrapper—File-wrapper and contents in the matter of the application of Herman Royer for letters patent No. 149,954, granted April 21, 1874	281	207
Letters patent No. 149,954, granted Herman Royer April 21, 1874	293	215
Letters patent No. 199,415, granted William Coupe January 22, 1878	295	216
Letters patent No. 202,414, granted William Coupe April 16, 1878	298	218
Letters patent No. 241,308, granted William Coupe May 10, 1881	301	221
Letters patent No. 182,106, granted William Coupe September 12, 1876	303	224
Letters patent No. 77920, granted Herman and Louis Royer May 12, 1868	306	226
Letters patent No. 91772, granted Herman Royer June 22, 1869	308	228
Letters patent No. 187,492, granted John A. J. Shultz February 20, 1877	309	229
Letters patent No. 5534, granted C. H. Brand April 25, 1848	310	231
Letters patent No. 14832, granted John Rose May 6, 1856	311	232
Letters patent No. 44025, granted A. Taw August 30, 1874	312	233
Letters patent No. 54587, granted Moses W. Page May 8, 1866	313	234
Letters patent No. 57165, granted Thomas McDonald August 14, 1866	314	236
Letters patent No. 100,652, granted Joshua Merrill March 8, 1870	315	237
Opinion of Judge Colt	316	239
Clerk's certificate	320	241
Bond on appeal	321	241

1 UNITED STATES OF AMERICA, *Massachusetts District*, } ss:

At a circuit court of the United States for the first circuit, begun and holden at Boston, within and for the district of Massachusetts, on Monday, the fifteenth day of October, in the year of our Lord one thousand eight hundred and eighty-eight, before the Honorable Le Baron B. Colt, circuit judge.

HERMAN ROYER, Complainant, *v.* WILLIAM COUPE *et al.*, Defendants. } No. 1974. Equity.

The bill of complaint in this cause was filed in the clerk's office on the sixth day of February, A. D. 1884, and was duly entered at the October term of this court, A. D. 1883, and is in the words and figures following:

2 *Bill of Complaint.* (*Filed Feb.* 6, 1884.)

To the honorable the judges of the circuit court of the United States in and for the district of Massachusetts:

Herman Royer, of San Francisco, in the county of San Francisco and State of California, and a citizen of said State and of the United States, brings this bill of complaint against William Coupe and E. A. Burgess, both of that part of Attleboro', in the county of Bristol and Commonwealth of Massachusetts, known as South Attleboro', and copartners under the firm name and style of William Coupe & Co.

And thereupon your orator complains and says, on information and belief, that on and prior to the twenty-first day of April, A. D. 1874, Herman Royer, of San Francisco, in the State of California, was a citizen of the United States and was the original and first inventor of a certain new and useful improvement in the modes of preparing rawhide for belting not in public use or on sale for more than two years prior to his application for a patent next hereinafter mentioned, and that, being such original and first inventor, the said Herman Royer, before said twenty-first day of April, A. D. 1874, made application in due form of law to the Commissioner of Patents of the United States for letters patent for his said invention, and duly swore to the specification thereof; whereupon such pro-

3 ceedings were had that on said twenty-first day *day* of April, A. D. 1874, letters patent of the United States numbered 149,954 were granted him, the said Herman Royer, therefor, in conformity with the requirements of the statute in such case made and provided, and that the said letters patent in their terms granted to the said Herman Royer and to his heirs or assigns, for the term of seventeen years from said last-mentioned day, the exclusive right to use and employ the invention therein described and claimed, referring to the specification for the particulars thereof, and

your orator brings here into court a duly authenticated copy of said letters patent, and prays that the same may be taken as a part of this bill.

And your orator further shows that your orator then became and ever since has been and now is entitled to and possessed of the full and exclusive right and liberty of using and employing the aforesaid invention within and throughout the United States and the territories thereof.

And your orator further shows that the said invention has hitherto been in the exclusive possession of your orator and is of great profit to your orator; yet that the said defendants, well knowing the premises and the rights and privileges so as aforesaid secured by the said letters patent, but contriving to injure your orator and to deprive him of the profits, benefits, and advantages which might and otherwise would have accrued to him from the said letters patent, have been ever since the twenty-first day of April, A. D. 1874, and still are unlawfully, wrongfully, and without license or permission of your orator using and employing in the manufacture of rawhide for belting and otherwise the aforesaid invention patented by the said letters patent, in violation and infringement of the aforesaid rights and privileges of your orator, but to what extent the said defendants have so used or employed or are now using or employing the said invention your orator is ignorant and cannot set forth, but he avers that the said defendants have derived and received and are still deriving and receiving therefrom great gains and profits, but to what amount your orator is ignorant and cannot set forth, and he prays that the defendants may be required to make a disclosure of all such gains and profits; and your orator further shows that

3a said defendants intend and threaten to continue their said infringement and are prepared and ready so to do, and that unless restrained by the injunction of this court they will continue such infringement, whereby your orator will suffer great and irreparable loss and damage.

And your orator further prays that the said defendants may be compelled by a decree of this court to account for and pay over to your orator all such gains and profits as have accrued to or been received by them or either of them, and all such gains and profits as they may be entitled to by reason of the aforesaid use and employment of said invention and improvement, and all such gains and profits as your orator would have received but for the said unlawful acts of the said defendants, and the damages which your orator has sustained by said unlawful acts of the said defendants.

And that the defendants, their clerks, attorneys, agents, servants, and workmen, may be perpetually enjoined and restrained by the decree and injunction of this court from directly or indirectly using or employing in the preparation of rawhide for belting or in any other way the said invention and improvement described and patented in said letters patent, and that they may be decreed to pay the costs of this suit, and that they may be also enjoined and restrained as aforesaid during the pendency of this suit, and that your

orator may have such other and further relief as the equity of the case may require and to this court may seem meet.

To the end, therefore, that the defendants may, if they can, show why your orator should not have the relief hereby prayed and may full, true, direct, and perfect answer make to the several matters hereinbefore stated and charged as fully and particularly as if the same were here repeated and the defendants specially interrogated in reference thereto, and especially that they may set forth whether, since the twenty-first day of April, A. D. 1874, they have used or employed, or are now using or employing, or causing or permitting to be used or employed within the district aforesaid or elsewhere in the United States the said invention and improvement or any part thereof, and to what extent they have so used or employed the same or caused or permitted it to be used, and whether they claim so to use and employ the said invention and improvement or to cause or permit the same to be used and employed under any pre-
4 tended grant or license held by them or by others under said letters patent—

May it please your honors to grant unto your orator not only writs of injunction conformable to the prayer of this bill, but also a writ or writs of *subpœna ad respondendum* issuing out of and under the seal of this honorable court, directed to the said defendants, commanding them to appear and make answer to this bill of complaint and to perform and abide by such order and decree herein as to this court may seem required by the principles of equity and good conscience.

And your orator, as in duty bound, will ever pray.

HERMAN ROYER,
By FREDERICK P. FISH,
His Solicitor.

FREDERICK P. FISH,
Solicitor and of Counsel.
M. A. WHEATON, *Of Counsel.*

At the said October term the following answer was filed:

Answer. (*Filed May* 9, 1884.)

The joint and several answers of William Coupe and E. A. Burgess to the bill of complaint of Herman Royer.

These defendants, now and at all times saving and reserving unto themselves all and all manner of benefit and advantage of exception that may or can be had or taken to the many errors, uncertainties, insufficiencies, and imperfections in complainant's said bill of complaint contained, for answer thereto or to so much and such parts thereof as they are advised it is material or necessary for them to make answer unto, answering, say—

They are informed and believe that letters patent of the United States No. 149,954 were on the twenty-first day of April, 1874, granted to Herman Royer for a certain improvement in the modes

of preparing rawhide for belting, but they deny that the said Herman Royer was, as is alleged in said bill, the original and first inventor of said improvement, and they also deny the allegation that the said improvement was not in public use or on sale for
5 more than two years prior to the application of the said Royer for said letters patent.

And these defendants deny that they have been since the said twenty-first day of April, 1874, or that they now are unlawfully and wrongfully using or employing in the manufacture of rawhide, for belting or otherwise, the said supposed invention set forth in said letters patent, or that they have in any manner violated and infringed the rights and privileges of the said complainant.

And these defendants aver that the process described and set forth in the said Royer patent, No. 149,954, is valueless for practical use in the manufacture of rawhide for belting or other purposes, and that the manufactured product resulting from said processes is of inferior quality, for the reason that the steps employed in the process set forth in the patent are inadequate to prevent the decomposition of the hide, and that when hides are thus treated by the process described in said patent *that* they will decompose and become valueless for useful purposes, for the reason that the fatty matter contained in the hide has not been removed.

And these defendants, further answering, say and aver that the said process set forth in the said letters patent No. 149,954 is composed of a series of steps, consisting, first, of the removal of the hair from the hide by means of sweating; second, drying the hide perfectly hard; third, then softening the hide slightly by soaking in water; fourth, fulling the hide; fifth, stuffing the hide with twenty parts of tallow, two parts of wood tar, and one part of rosin; sixth, fulling the hide a second time; seventh, repeated moistenings with water, and, eighth, stretching and cutting into belting.

And these defendants further aver that the supposed importance of the alleged invention set forth in the said letters patent No. 149,954 is the avoidance of the use of lime, acid, or alkali in the treatment of the hides and the consequent avoidance of the use of any chemical agents to neutralize the action of such lime, acid, or alkali.

And these defendants further aver and will prove that the process employed by them in the manufacture of rawhide for belting and other purposes is substantially different from the process set forth and described in the said Royer patent, No. 149,954, and that
6 it does not employ or make use of the supposed invention set forth in the said Royer patent and recited in the claim thereof; and they further aver that they have pursued and practised the process which they are now employing for a period of time long prior to the supposed invention of the said Royer, specified in his said letters patent.

And these defendants further aver that each and all of the several steps, separately considered, set forth in the said Royer patent have for many years and long before the supposed invention of the said Royer been known to and in common use in the art of manufact-

uring leather and in the treatment of and in preserving and utilizing for industrial purposes animal hides, and that, except said patent be narrowly construed, it would exhibit no patentable subject of invention.

And these defendants further aver that the process of removing hair by sweating the hide had been known and practised in the art of tanning and curing hides long before the supposed invention of the said Royer; that the process of fulling hides is indispensable and has been practised ever since the art of tanning and curing hides was known; that the process of stuffing hides with tallow and greasy substances and with various admixtures of resinous substances, tar, and other materials had also been known from the earliest days of the art of manufacturing leather, and is specified, for example, in the letters patent of the United States granted to Joshua Merrill, dated March 8, 1870, No. 100,652, and in many other publications and letters patent long anterior to the supposed invention of the said Royer; all of which these defendants will prove by said patents and publications, to which they crave leave to refer, as well also as they will prove the same facts by the testimony of persons who have been engaged in manufacturing leather and treating and preparing hides for very many years and long before the supposed invention of the said Royer.

And these defendants further aver that the said Herman Royer was not the first and original inventor of the supposed invention set forth in the said letters patent, set forth in the bill of complaint, and recited in the claim thereof, but that the same was previously known and used by various persons, whose names and places of residence and the places where the same was used are now unknown to these defendants, but which, when discovered, they pray the right to insert herein.

7

And these defendants are also informed and believe, and therefore aver the fact to be, that the said supposed invention set forth in said letters patents so as aforesaid granted to the said Herman Royer on the twenty-first day of April, 1874, was in public use or on sale in the United States for more than two years before the application of the said Herman Royer for letters patent for said invention.

And these defendants further aver that letters patent of the United States No. 182,106 were, on the twelfth day of September, 1876, granted to William Coupe, one of these defendants, for an improvement in processes for the manufacture of rawhide, under which said letters patent these defendants are licensed and under which they carry on their said manufacture by the aid of the process therein described and certain improvements therein which their experience has in course of time suggested to them, and by the employment of which they are enabled to produce a product which is essentially different in durability, character, and quality from any product which can result from the employment of the process described in the said Royer patent, No. 149,954, in suit, and that such different product is produced by them by means of processes not comprehended in the said Royer patent, but essentially different therefrom.

And these defendants deny all unlawful acts wherewith they are by said bill of complaint charged, and say that the complainant has no right to any further answer to said bill or any part thereof than is hereinbefore contained, and is not entitled to any injunction, account, damages, or other relief prayed for in said bill; without this, that there is any other matter, cause, or thing in said complainant's said bill of complaint contained material or necessary for these defendants to make answer unto and not herein and hereby well and sufficiently answered, confessed, traversed, and avoided or denied is true to the knowledge and belief of these defendants: all which matters and things these defendants are ready and willing to aver, maintain, and prove as this honorable court shall direct, and humbly pray to be hence dismissed with their reasonable costs
8 and charges in this behalf most unjustly and wrongfully sustained.

WILLIAM COUPE.
EDWIN A. BURGESS.

BENJAMIN F. THURSTON, *Of Counsel.*

UNITED STATES OF AMERICA, *District of Rhode Island,* } ss:

William Coupe, being duly sworn, deposes and says that he is one of the defendants named in the foregoing answer; that he has read the said answer and knows the contents thereof; that the same is true of his own knowledge except as to the matters therein stated on information and belief, and as to these matters he verily believes it to be true.

WILLIAM COUPE.

Subscribed and sworn to, at Providence, in said district, this sixth day of May, A. D. 1884, before me—

WILMARTH H. THURSTON,
[SEAL.] *Notary Public.*

This cause was thence continued to the May term, A. D. 1884, when the following replication was filed:

Replication. (*Filed June* 27, 1884.)

The replication of Hermon Royer, complainant, to the answer of William Coupe *et al.*, defendants.

This repliant, saving and reserving unto himself all and all manner of advantage of exception to the manifold insufficiencies of the said answer, for replication thereunto says that he will aver and prove his said bill to be true, certain, and sufficient in the law to be answered unto, and that the said answer of said defendants is uncertain, untrue, and insufficient to be replied unto by this repliant; without this, that any other matter or thing whatsoever in the said answer contained material or effectual in the law to be replied unto, con-

fessed and avoided, traversed or denied, is true; all which matters and things this repliant is and will be ready to aver and prove as this honorable court shall direct, and humbly prays as in and by his said bill he has already prayed.

By his solicitor, FREDERICK P. FISH.

9 This cause was thence continued from term to term to this present October term, A. D. 1888, when, publication of the testimony having passed in the clerk's office, it is set down for hearing and fully heard by the court. On the twelfth day of March, A. D. 1889, the opinion of the court is announced and the following decree is entered:

Final Decree, March 12, 1889.

This cause came on to be heard at the October term, A. D. 1888, of this court upon the pleadings and proofs, and was argued by counsel for the respective parties; and now, upon consideration thereof, it is ordered, adjudged, and decreed that the bill of complaint in this cause be, and the same is hereby, dismissed with costs for the defendants, taxed at three hundred and thirty-one dollars and fifty-four cents ($331.54).

By the court:

ALEX. H. TROWBRIDGE,
Deputy Clerk.

From this decree the complainant in open court claims an appeal to the Supreme Court of the United States, and gives good and sufficient security that he will prosecute his appeal to effect and answer all damages and costs if he fail to make his plea good, and said appeal is allowed.

A true record.

Attest: JOHN G. STETSON, *Clerk.*

10 The following is the evidence used at the hearing of said cause before said circuit court:

Evidence for Complainant,

Taken pursuant to the sixty-seventh rule of the Supreme Court of the United States in equity, as amended, before me, Augustus S. Miller, special examiner.

Present: Frederick P. Fish, Esq., of counsel for complainant; Wilmarth H. Thurston, Esq., of counsel for defendant-.

PROVIDENCE, R. I., TUESDAY, *March* 31, 1885.

Counsel for complainant offers in evidence a copy of letters patent of the United States No. 149,954, granted to Herman Royer April 21, 1874, for an improvement in the modes of preparing rawhide for belting, on which this suit is brought, and the same is marked "Complainant's Exhibit Royer Process Patent, A. S. M., sp'l ex'r."

It is agreed that said copy may be used in lieu of the original with the same force and effect as if duly certified.

Deposition of William Coupe.

Direct examination by FREDERICK P. FISH, Esq., of counsel for complainant:

Int. 1. What is your name, age, residence, and occupation, and are you one of the defendants in this case?

Ans. William Coupe; age, fifty-one years; residence, South Attleboro', Mass.; occupation, tanner and leather manufacturer, and I am one of the defendants in this case.

Int. 2. State whether or not the firm of which you are a member manufacture rawhide for lace-leather. And, if so, will you produce a specimen of lace-leather, such as you manufacture, to be marked as an exhibit in this case?

Ans. We do manufacture rawhide lace-leather, and I now produce a sample of the style of leather we manufacture.

11 (The sample produced by the witness is introduced in evidence and marked "Complainant's Exhibit Coupe Lace-Leather, A. S. M., sp'l ex'r.")

Int. 3. How long have you manufactured rawhide lace-leather of the kind now produced?

Ans. I first commenced the manipulation of rawhide leather of the character we now manufacture about the year 1867, but I did not bring it to the perfection we now have it until some time in the year 1879.

Int. 4. Please describe the process of preparing rawhide for lace-leather as the same was carried on by you during the year 1883, being the year next prior to the bringing of this suit.

Ans. The process then employed by us was the same that we now employ, which is as follows: The removal of the hair is effected by what is known as the liming process—that is, the hide is subjected to the action of a solution of lime, which loosens the hairs and also destroys all the fatty and gummy matters, and thus prevents the subsequent decomposition of the hide.

After the hair is removed by this process of liming the hide is subjected to a suitable "drench," as it is called, for the purpose of removing the lime and other foreign matter.

After the hides come from this "drench" they are usually dried nine-tenths dry. Sometimes, however, and when it is not proposed to proceed with the subsequent operations immediately, the hides are dried thoroughly.

When they are dried nine-tenths dry, as stated, they are next stuffed and fulled at once, without the application of water.

When they are dried thoroughly dry, as stated, they are next dipped in water and immediately removed, this dipping being repeated three or four times during a period of some two hours and being

continued until the hide is brought back to a condition of being nine-tenths dry.

With the hide thus nine-tenths dry, the next step is to apply the stuffing. This is done before the hide is subjected to any fulling operation whatever.

The stuffing is composed of tallow, tar, bees-wax, and rosin. The stuffing is applied cold and in a thick, pasty condition.

12 The hide covered with this stuffing is then subjected to the process of fulling.

After being partially fulled the hides are taken out of the fulling machine and stretched upon a machine adapted for that purpose.

After being stretched another coat of stuffing is applied, and they are then again subjected to the action of the fulling machine to complete the fulling.

After the operation of fulling is completed the hides, immediately upon coming from the fulling machine and without being moistened with water, are again stretched.

As soon as this second stretching is completed they are ready for the operations of currying and finishing.

The entire treatment of the hide from its nine-tenths dry state until finished is done in one day unless the operation is temporarily suspended.

Int. 5. What is the strength of the solution of lime employed in your liming process?

Ans. It varies somewhat according to the temperature of the atmosphere. In the winter we use a stronger lime than we do in the summer.

Int. 6. What is the composition of the drench employed by you?

Ans. We have a style of drenching that we don't care to make public. After the drench there are no foreign substances left in the hide.

Int. 7. In what proportions are the tallow, tar, bees-wax, and rosin combined in your stuffing?

Ans. It is not just exactly fresh in my mind at present—the exact combination—but I think it is somewhere in the neighborhood of ten pounds of tar, ten pounds of rosin, and seven pounds of bees-wax to a hundred pounds of tallow. I don't give this as an exact estimate, but as an impression that it is somewhere in that proportion, varying somewhat in hot or cold weather.

Int. 8. Will you look the matter up and, if you find that you have made any substantial error in your last answer, make a statement of the facts as you find them to the magistrate to be added as part of your deposition?

13 Ans. I will do so.

Int. 9. Has it been invariably your practice to apply the stuffing before any fulling operation whatever?

Ans. Always; it would be injurious to the hide to do otherwise.

Int. 10. Look at the copies of letters patent Nos. 199,415, 202,414, 241,308, all to William Coupe, now shown you, and state whether

or not you are the William Coupe named as patentee in said patents.

Ans. I am.

Int. 11. State whether or not the fulling machine employed by you in fulling rawhide is described and shown in any of said letters patent.

Ans. The fulling machine used in the manufacture of rawhide lace-leather is described in patent No. 202,414, which is an improvement on the patent No. 199,415. This is the machine we have used since the date of patent No. 202,414.

(Counsel for complainant introduces in evidence the three copies of letters patent referred to in Int. 10 and Int. 11 and the answers thereto, and the same are marked "Complainant's Exhibit Coupe Patent 199,415," "Complainant's Exhibit Coupe Patent 202,414," and "Complainant's Exhibit Coupe Patent 241,308," respectively.)

Int. 12. How long do the hides remain in the fulling machine during the first of the two operations of fulling to which you have referred?

Ans. That depends greatly upon the nature of the hide. Some hides will soften much more readily than others. We have completed the softening process in as short a time as five hours and three-quarters, and sometimes, when the hides are rather stubborn and not as thoroughly limed as they ought to be, it will take as much as a day and a half to complete the process, but the average time to complete the fulling process is about from seven to eight hours. We usually leave them in the cribs of the machine shown in patent No. 202,414 from two to four hours for the first softening, and the remainder of the time I have mentioned is consumed by the second operation of fulling.

Int. 13. How many hides are put into one crib?

13a Ans. The number of hides put into a crib depends something upon the size of the hides. We can get from a hundred to a hundred and fifty feet of leather, surface measurement, into each crib. We fill the cribs as full as we are able to work them.

Int. 14. What is the effect of the fulling operation upon the hide as the same is practised by you?

Ans. In our patent machine it has the same effect on a hide as an ordinary currier's board would have on a piece of leather; it softens and breaks down the fibre.

Int. 15. What is the purpose of the end pressure brought to bear upon hides in the machine shown in your patent?

Ans. The purpose of what we call in our machine the double false heads is to more effectually confine the hides as occasion may require, thereby to facilitate the boarding and breaking.

Int. 16. At what speed are your fulling machines run?

Ans. Owing to the construction of our cribs and the manner in which our hides are attached to several places of the shaft instead of in one place, as in ordinary machines, they are enabled

to run at a speed of from twenty-seven to thirty revolutions per minute.

Int. 17. After how many revolutions does the crib reverse?

Ans. That depends upon the length of the hide to be operated upon, a long hide, of course, taking a longer time than a short one. I should say from five to eight revolutions as an estimate. The diameter of the shaft of the crib is from three to four inches.

Int. 18. At what temperature are the hides kept while in the fulling machine?

Ans. They are never kept at any particular temperature. We could if we thought proper so compress the hides and create so much friction as to burn them. We never allow our hides intentionally to get over blood heat under any conditions or circumstances.

Int. 19. In the process of fulling the hides are actually heated, are they not, by the operation of the machine?

Ans. No more so in that machine than what they would be in an ordinary fulling mill. The object of all fulling of any name or nature is to increase the temperature of the hide, which materially facilitates the softening.

Int. 20. Look at copy of letters patent of the United States
14 No. 182,106, now shown you, and state whether or not you are the William Coupe named therein as the patentee in said patent.

Ans. I am.

(Counsel for complainant introduces in evidence the copy of letters patent referred to, and the same is marked "Complainant's Exhibit Coupe Patent No. 182,106.")

Int. 21. Have you a model of the reversing device by which the direction of revolution of the crib in your fulling machine is effected? If so, will you please produce the same to be marked as an exhibit?

Ans. I have, and here produce said model. The model is an accurate representation of that portion of the full-size machine which it purports to represent, with the exception that in the model the clutch employed to connect the loose pulleys alternately with the shaft upon which they are mounted is a positive clutch, whereas in the full-size machine the clutch employed is a friction clutch. The cribs to be revolved, represented by Fig. 1 of patent 202,414, are driven by the shaft, upon which are the clutch pulleys, through intermediate gearing. There are from four to eight cribs in each machine arranged as shown in patent 199,415.

(The model produced by the witness is introduced in evidence and marked "Complainant's Exhibit Model of Coupe Reversing Device, A. S. M., sp'l ex'r.")

Int. 22. Describe briefly the operation of this reversing device when used in connection with your fulling machine.

Ans. We will suppose the machine to be stopped, the clutch lever disengaged from both of the loose pulleys, and the ball lever in an

upright position. We now wish to start the machine; we disengage the ball lever from its upright position and let it fall. It immediately on its fall comes in contact with a clutch lever, which engages one or the other of the loose friction pulleys, starting the entire mechanism to work, the screw-shaft being revolved in the direction that the friction-pulley shaft is then running. The nut on the screw-shaft, after travelling a short distance and bringing the ball lever in an upright position, throws the clutch lever over and engages the other loose pulley, which drives the machine in an opposite direction, which brings the other nut on the screw-shaft in contact with the ball lever, and when it comes to a certain
15 position is again thrown over. Each time the clutch lever is thrown over it is grasped by a dog operated upon by a small projection on the nut of the screw-shaft and held in position after the release of the ball lever. We obtain the change of direction simply by the cross and straight belts. Without the cross and straight belts our automatic shipper would cause no change in the direction of the shaft.

Int. 23. How long have you had this reversing device in use?

Ans. We put this device in operation about the time we introduced the breaker—that is, about the year 1878—but not in the improved condition it is now. In its present form we have used it at least four years.

WILLIAM COUPE.

Attest: AUGUSTUS S. MILLER,
Special Examiner.

Counsel for complainant produces in evidence a copy of letters patent No. 77920, granted Herman and Louis Royer May 12, 1868, being the patent referred to in the patent to Herman Royer here in suit, and the same is marked "Complainant's Exhibit Royer 1868 Patent, A. S. M., sp'l ex'r."

It is agreed that the copy of said patent introduced in evidence may be used in lieu of the original with the same effect as if duly certified.

Attest: AUGUSTUS S. MILLER,
Special Examiner.

PROVIDENCE, *April* 7, 1885.

The above-named witness, William Coupe, personally appears before me this day and makes the following statement in accordance with his promise in answer to Int. 8 in the above deposition, to wit:

That he finds, upon examination, that the statement made by him from recollection at the time, in answer to Int. 7, of the proportions of the ingredients of the stuffing used by him was not ex-
16 actly in accordance with the fact, as he stated in said answer might be the case, and that the correct proportions of the said ingredients are as follows, viz: One hundred pounds of tallow, fifteen pounds of tar, ten pounds of rosin, and eight pounds of beeswax.

And the said Coupe further states, in response to the request of counsel for the complainant contained in a letter since the time the above deposition was given, that the proportions of the ingredients above stated are the proportions that have been used by him for the last four years, and, further, in response to request of counsel for complainant, says that he makes no modification in the above formula on account of the season of the year or character of the leather, but that he does in the winter time, as occasion may require, add more or less oil to the composition above mentioned.

WILLIAM COUPE.

Attest: AUGUSTUS S. MILLER,
Special Examiner.

Evidence for Complainant,

Taken pursuant to the sixty-seventh rule of the Supreme Court of the United States in equity, as amended.

Deposition of Herman Royer.

Direct examination by M. A. WHEATON, Esq., of counsel for complainant:

Int. 1. Please state your name, age, residence, and occupation.

Ans. My name is Herman Royer; I am of lawful age; I reside in San Francisco, California, and I am a belt-maker and also a manufacturer of fulled rawhides.

Int. 2. Are you the complainant in this case?

Ans. I am.

17 Int. 3. Are you one of the patentees to whom United States letters patent numbered 77920 and bearing date May 12, 1868, were granted?

Ans. I am.

Int. 4. Are you also the patentee to whom United States letters patent No. 149,954, bearing date April 21, 1874, was granted for an improvement in the modes of preparing rawhide for belting?

Ans. I am.

Int. 5. Will you describe the object and operation of the machine described in the first-mentioned letters patent, No. 77920?

Ans. I will. The machine is constructed as shown in the patent, with two stationary disk-shaped heads, and a number of parallel rods are set in a circle around the centre of the disk and at a considerable distance from such centre. The ends of these parallel rods penetrate the disks and connect them together, and thus the disks and rods form a cylinder-shaped stationary crib or drum. A revolving shaft passes through the centre of this crib, running parallel with the crib bars, and also passes through the disk-shaped heads mentioned. There is a longitudinal slot and set-screws in the shaft that furnishes means for fastening to the shaft one edge of the hides that are to be treated in the machine.

The object of the machine is to apply to rawhides in a better manner than was ever done before very powerful mechanical action for the purpose of reducing them to a soft and pliable condition.

Int. 6. Please describe more specifically the mechanical treatment of the hides in the said machine, giving as well as you can a description of the movements of the machine and also the movements of the hides while under treatment in the machine.

Ans. The only parts of the machine that moved while treating the hides were the central shaft and the apparatus that drove it and a slight vertical movement of the disk-shaped weight which formed a false head and rested upon the upper edges of the coil of hides in the machine.

In operating the machine the hides were fastened by either one edge or one end to the central shaft of the machine, and the
18 shaft was then made to revolve in one direction until the hides were entirely wound around the shaft. As many hides were put into the machine at once as the cage or drum would hold, so that when the hides were wound around the shaft they were tightly compressed within the upright circle of rods or pins that formed the cage or drum of the machine. When the shaft was reversed the hides, while under this pressure, had to begin to unwind from the shaft, and at the same time had to wind upon it in the opposite direction. When the hides are entirely wound around the shaft in one direction, as I have described, they remain wound around the shaft constantly, either in one or both directions, while in the machine. When the shaft reverses the coil of hides already formed remains stationary in the machine, except that part in the centre of the coil, which begins to rewind upon the shaft in the new direction. As fast as the coil rewinds in the new direction upon the revolving shaft it forms a new coil around the shaft in the new direction and is carried around with the shaft, while that part of the hide which remains in the coil last made remains stationary and is still wound around the shaft in the direction opposite from that of the new coil. The same hide makes a part of both coils, being partly in one and partly in the other, but being constantly wound out of one into the other. There is no unwinding of the hides except just at the double or point where the outside fold of the new coil being formed is meeting and taking the inside fold of the last or stationary coil. This point is constantly progressing forward.

As the shaft revolves the new coil which is carried around with the shaft and is in motion keeps growing larger, while the last coil keeps losing its inner folds as they are rewound onto the new coil, until the whole of the last coil is rewound onto the new coil, when the shaft is again reversed and the operation is again repeated. This unwinding of the hides from the shaft from one direction and rewinding them upon the same shaft in an opposite direction while the hides were compressed within the cage caused a short bending or doubling to begin at the part of the hide next to the shaft, and to move or progress through the hides until they were entirely rewound around the shaft in the opposite direction from that in which

they were last wound around it. As often as the hides were
19 entirely wound around the shaft in one direction the shaft would be reversed and the unwinding of the coil of the hides and the rewinding of them in a new coil in the opposite direction around the same shaft, and thus carrying a progressive bend or doubling entirely through the hides, would be repeated. This unwinding and rewinding was but one operation, and it was repeated until the bending or doubling of the hides, which would be first in one direction and then in the opposite direction, had reduced the hides to the soft, pliable condition desired.

Int. 7. Please explain the nature, object, and effect of the invention described in letters patent No. 149,954, on which this suit is based.

Ans. I commenced making experiments in 1867. At that time it was well known that rawhide could be made soft and pliable by mechanical action. It was a very desirable article to use while in this soft, pliable condition; its strength was enormous. It was not an article of commerce nor was it in common use, for the following reasons: A piece of rawhide made soft by mechanical action would return naturally to a hard condition when laid away. In damp places it would mould and decay like so much putrid meat. It would also be eaten by rats, mice, and vermin whenever it was accessible to them. Its early destruction from these or other causes was so certain to take place that it was not worth while to make it at all. It never was manufactured as an article to keep in stock nor in any considerable quantity.

The object and effect of my invention were to overcome all these objections, and to so far improve and modify rawhide softened by mechanical action that it would become an article of commerce. This object and effect I finally accomplished, and I succeeded in creating the article now known as fulled rawhide. In seeking to accomplish this object, about the first thing that I did was to finish a rawhide doubling machine, which had been already partly invented by my brother, Louis Royer; that finished machine is the same one that is described in patent No. 77920. I discovered, finally, that by making a mixture of tar, tallow, and rosin and working it into the hide while the hide was being treated in the machine, as described in the patent, that the desired object was obtained,
20 and the present article that is now on the market and known as fulled rawhide was the result of this treatment of rawhides.

Int. 8. Do you know whether or not you were the first person who ever made the article that is now on the market and known as fulled rawhide?

Ans. Yes; I know that I was. I knew that the tanning trade had long desired to learn some method of treating rawhide so that it would retain the properties of strength and lightness that belonged to it when it was redueed to a soft condition by mechanical action; and I know that no one had ever succeeded in accomplishing this result until I did it. It is not possible that the article could have been manufactured before I did it without my having learned by

this time that such was the fact. When I commenced my experiments, in 1867, the article that is now known to the world as fulled rawhide had never yet been made, and the opinion of the tanning fraternity was that such an article could not be made. I read the different authors on tanning, and learned from the books and from many people engaged in the tanning business the different known methods of tanning leather and treating hides; yet, with all the information that I could obtain from all sources and all the knowledge that I could gain from the developments resulting from my own experiments, it was about five years before I succeeded in manufacturing my fulled rawhide and in testing it far enough to know that I had succeeded in obtaining the article I was trying to obtain—that is, an article of rawhide that would not be eaten by rats and mice and that would be soft and pliable and strong and remain so when stored away as stock for a very long time.

Int. 9. Will you please give a general outlined history of the nature of your experiments, the difficulties you encountered, and how and when you succeded in overcoming them?

Ans. I will try to do so. The only object of the machine was its use in trying to produce and manufacture the article now known as fulled rawhide. To manufacture the article the hides of which it was made had to be made soft and pliable by being subjected to an intensely severe and long-continued mechanical operation, such as twisting or doubling back and forth. In order to have this mechanical operation reduce the hides to a soft and pliable condition
21 the hides themselves had to be in a certain condition as to moisture. If the hide was too dry and hard it would not work well in the machine, but would break and kink and be damaged in irregular lines and streaks. If the hides were too wet, the mechanical action would not affect them, and they could not be made into fulled rawhide. I had, therefore, to keep making my experiments with hides at nearly the same degree of moisture, and yet had to keep changing that degree of moisture by slight variations until I found a degree of moisture that would reduce the hides to a condition in which they could be successfully worked in the machine and made into fulled rawhide. While making my experiments I did not know whether or not there was a possible condition of moisture to which the hides could be reduced in which they could be treated in the machine and not be so wet that they would not make good fulled rawhide. I had found that if the hides were quite wet they could be treated in the machine without kinking or packing or other irregular action, but I had also found that in such case the mechanical action would not have the effect of making the hides sufficiently soft and pliable when they became dry. In order to make the hides soft and pliable when they are dry, the cohesion of their fibres has to be broken up. The fibres themselves should not be broken, but they have to be loosened from each other. When the hides are wet the water makes them soft and limber for the time being, and they will double back and forth in the machine without loosening the fibres from each other.

To show the difficulties that I met with and had to overcome I

will here state that I worked incessantly and constantly from the year 1867 forward to the year 1871 in trying to make an article of rawhide that would retain its natural strength and which could be used as an article of commerce for lacing and belting and ropes and similar articles. To accomplish this result I had to discover some mechanical means by which all parts of every hide could be subjected to an equal and uniform amount of mechanical action, which mechanical action must be very powerful and long continued, so that no hard spots would be left in the hide. One of the great troubles was to avoid having hard spots left in the hide in spite of the mechanical treatment. There is a great difference in the thick-
22 ness of the different parts of all hides; some parts of the hide are three times as thick as other parts of the same hide. This was one cause of the great trouble I had in discovering whether or not there was a degree of moisture to which the hides could be reduced at which they could be successfully treated in the machine. It took much more soaking to moisten the thick parts of the hide than it did the thin parts. I finally learned how to moisten the entire hide uniformly by peculiar ways of folding it while moistened, hanging it so that some parts of the hide would be longer in water than other parts, etc. I was all the while doing all this work in the dark, not knowing what the ultimate result would be. Besides the difference in the thickness of the different parts of the same hide, there is also a great difference in the texture of the different parts of the hide. Besides all of this, there are no two hides that are alike as to thickness and texture. I many times worked hides in the machine while trying my best with the lights then before me, and the hide would come out of the machine overheated and thereby injured by the mechanical action in some places, while there would yet be raw, hard spots in other places in the same hide.

I also had to discover some means by which the hides could not only be preserved indefinitely in the soft and pliable condition to which the mechanical action had reduced them, as they would always naturally return to a hard condition if they were merely made soft by mechanical action and then laid away as merchandise, but I also had to discover and apply means that would preserve the hides, after being softened by mechanical operations, against moulding and the effects of damp atmosphere, and also protect them against the attacks of rats, mice, and vermin. I had not obtained all of these results until the year 1871. It was with me a constant series of struggles, experiments, and efforts to overcome obstacles during all of those years.

Even after I had made a finished article of fulled rawhide, in 1871, and had gotten my machines and processes so that they worked regularly and smoothly I still did not know whether the fulled rawhide that I made would withstand the effects of time and the different conditions to which it would be subjected when it would be dealt with as an article of commerce or not. I knew it was
23 good and admirable for immediate use. About the first of the year 1872 I shipped some of the fulled rawhides to New York to John Fell, a commission leather merchant, who kept a store

at number nine (9) Jacob street, in New York. He did not sell the fulled rawhide that I sent to him, and it remained in the store until about the month of September, in 1872, when I went to New York and saw it there. It was the same fulled rawhide that I had shipped to John Fell, but the store had changed hands. The fulled rawhide was in a perfect state of preservation, and had not deteriorated in any of its qualities, and I then knew for the first time that I had produced an article of fulled rawhide such as I had so long been struggling to obtain—an article that would retain its good qualities and could be dealt in as an article of commerce. Up to the time that I returned here from the East, which was in October, 1872, I had never been able to sell the fulled rawhide that I made for as much as it cost me to make it. It was not until the fall of 1872 that I could make the business of manufacturing and selling fulled rawhide pay its own expenses. I began shipping it East in 1872 in a small way. As it became better known my sales increased from 1872 to 1875 in California, and in the East my sales continued up to the year 1875 in a small way. What was sold in the East during that time I manufactured here in California and shipped to the East. I could not fill many of the orders from the East, because I had not sufficient capital to do the business with. In the beginning of 1872 I had acquired considerable financial strength from the business, and I built a factory of my own and prepared to do a larger business and supply all orders from all sources for the new article of fulled rawhide.

By this time the article became so well known and the demand for it had increased so largely that parties in the East began to manufacture and supply the market, and my sales in the East almost all ceased in the year 1875. An immense business is now done in the East by several parties who are manufacturing and selling the new article of fulled rawhide. They all use machines similar to my machines and processes similar to my processes. They are all following in my footsteps, and they are not only supplying the
24 East with fulled rawhide, but they have been shipping it to San Francisco and selling it in competition with mine since 1875. Prior to 1875 I never saw or heard of a single piece of the article now known as fulled rawhide being upon the market except that of my own manufacture. Now, I believe that the value of this article of fulled rawhide that is manufactured in the East exceeds four thousand dollars per day.

Int. 10. Have you examined the specifications and drawings of the letters patent No. 202,414, granted to William Coupe on the sixteenth day of April, 1878, and do you understand them?

Ans. I have examined them and I understand them, and I understand the machine therein described in all its details and elements and combination of elements.

Int. 11. How does the machine described in the specifications and drawings of said patent No. 202,414 compare as to construction and operation with the machine described in the specifications and drawing of the United States letters patent No. 77920, dated May 12, 1868,

and granted to you and Louis Royer for an improved machine for treating rawhides?

Ans. Both of the machines are cribs for applying mechanical action and power to the softening of rawhides by running a continuous doubling movement through them in the manner I have already described. Both of the machines have a central revolving shaft, to which one edge of the hides being treated is fastened. Both machines have two stationary heads of disk shape, and a circle of rods or bars running from one of these disk heads to the other and connecting them with each other. In both machines these rods or bars are stationary, and are set parallel with the central shaft, and are arranged around it in a circle of which the shaft is the centre, and thus form a circular crib. Both machines have false heads that press upon the edges of the hides being treated. The operation of the two machines is precisely the same, and they both produce exactly the same effect upon the hide being treated. In both machines the hides are alternately wound and rewound around the central shaft in exactly the same manner, and are compressed within the circle of rods that form the cribs and by the false heads in precisely the same way and with the same effects. There are some slight differences in the construction of some of the minor details of the two machines as follows: Coupe's machine is placed in a horizontal position, while the Royer machine was in a vertical position. Coupe's machine has two false heads, and they are pressed against the edges of the hides with springs, while Royer's machine had but one false head, and that was pressed against the edges of the hides by its own weight. The crib bars in the Coupe machine are adjustable, while the crib bars in the Royer machine were not adjustable.

Int. 12. What difference do these differences in the construction of the machine make in their operation or method of operation or in the effects which they produce?

Ans. The difference in construction between the two machines does not make any difference whatever in the respects mentioned. Both machines treat the hides exactly alike. Both machines put the hides through exactly the same motions and under the same kind and amount of pressure and both alike reduce the hides to a soft, pliable condition. There is nothing that one of the machines will do with the hides that the other machine will not also do and do it in exactly the same way.

Int. 13. Have you read a copy of the deposition of the defendant Wm. Coupe, given in cases pending in this court in which you are complainant and he is defendant, in which he has described the process used by the defendants in manufacturing their article of fulled rawhide?

Ans. I have.

Int. 14. Will you please compare the process used by the defendants, as described by Mr. Coupe in his said deposition, with the process described in your patent, and point out the similarities and differences between the two processes?

Ans. I will endeavor to do so. I have already in this deposition

described the process shown in my patent. I have also compared the machine used in my process with the machine used by Mr. Coupe in his process, and have shown how the two machines operate alike. The operation of these machines while doing their work constitutes a large part of the process used by the defendants and described in my patent. In my patent I speak of removing the hair from the hides by means of sweating and state that it is a process familiar with every tanner. Mr. Coupe in his deposition states that
26 the defendants remove the hair from their hides by what is known as the liming process, and that after the hair is removed the hides are subjected to a drench for the purpose of removing the lime and other foreign matter. This process of unhairing used by the defendants, as described by Mr. Coupe, is also a process that has long been familiar to tanners. Any tanner could use it by means of the common knowledge belonging to the tanning trade and without any invention. When the hides were thoroughly drenched by the defendants' process, and the lime and foreign matter thoroughly removed from the hides and the hides were dried, they were then in precisely the same condition as the hides which would be unhaired by the sweating process and dried as described in my patent. So far as the unhairing and drying of the hides goes, the sweating process described in my patent and the liming and drenching process described in Mr. Coupe's deposition are well-known equivalents of each other, and have been well known as equivalents of each other for more than twenty years last past.

In Mr. Coupe's deposition he states that when the hides are nine-tenths day the defendants apply to them a stuffing composed of tallow, tar, bees-wax, and rosin, and that the hides are then put into the fulling machine and subjected to the process of fulling; that after being partially fulled they are taken out of the fulling machine, stretched, and have more stuffing applied to them, when they are again subjected to the action of the fulling machine.

In this treatment of their hides by the defendants they use the same process described in my patent in all its substantial and essential particulars. By the use of the drench they remove the lime from the hides, and by so doing they avoid the injury which the lime would do to the hides if they were left impregnated with it. They also use a machine which doubles the hides by a progressive bending from edge to edge, so as to treat all parts of the hide alike, and avoids leaving hard spots in them the same as in my machine, which is covered by the patent of May 12, 1868, referred to in the process patent on which this suit is based. The defendants also use a stuffing composed of tar, rosin, and bees-wax for their hides. My patent mentions a stuffing of tar, tallow, and rosin. The tar, tallow, and rosin used in the stuffing of the defendants produces precisely the
27 same effect upon the hides in their treatment as that described in my patent. In the defendants' process the use of the tar prevents dogs, cats, mice, vermin, etc., from attacking the hide, and at the same time it causes the tallow to enter the hide quickly and thoroughly. The use of the rosin and tallow produces the same effect as used by the defendants as they do when used exactly as described

by my patent. The defendants produce by the use of their machine and stuffing and fulling operations the same article of fulled rawhide as that which I have been producing ever since 1872 by the use of my machine and the stuffing and fulling operations described in my patent. Not only have the defendants produced the same article as that which I have produced, but they produce it by imitating my machine and by imitating my process. The process used by the defendants is substantially the same as that used by me and as described in my patent.

Int. 15. Have you seen and examined a copy of the specifications and drawings of letters patent No. 182,106, dated Sept. 12, 1876, and granted to the defendant William Coupe, for an invention described in the patent as an improvement in processes for the manufacture of rawhides?

Ans. I have.

Int. 16. What is there described in that patent which is not used by the defendants in their process of manufacturing fulled rawhide as described by Mr. Coupe in his deposition?

Ans. The "sour" described in the specifications, consisting of diluted sulphuric acid, is not used by the defendants, neither do they use the "slush," consisting of tallow, paraffine, and bees-wax, described in Mr. Coupe's patent. They leave out the paraffine and instead thereof they put in tar. By this change the defendants appropriate a stuffing substanially the same as that described in my patent and very substantially different from the stuffing described in Mr. Coupe's patent. I believe the defendants also apply the stuffing to the hides cold instead of applying it warm, as described in Mr. Coupe's patent. The defendants also use a fulling machine such as I have described instead of using the air-tight drum twelve feet in diameter and four feet wide, with internal projecting pins, as described in Mr. Coupe's patent; neither do the defendants
28 use a current of warm air forced into the drum which is described in Mr. Coupe's patent as a vital point in producing a good article of stock. In fact, nothing that is described in Mr. Coupe's patent as new is used by the defendants in their process. I understand him to state in his testimony that the kind of drench which he uses for removing the lime from the hides after unhairing is a secret, and I suppose from that that it is not the drench which is described in his patent, because that drench is made public by his patent. The unhairing of the hides by the use of lime and afterwards removing the lime by drenching and washing is not new, and I do not understand Mr. Coupe's patent to describe this part of his process as new. Everything else which is described in Mr. Coupe's patent and not described in mine is not used by the defendants according to the statements contained in Mr. Coupe's deposition, which statements I believe to be true.

Present: M. A. Wheaton, Esq., of counsel for complainant; Manuel Eyre, Esq., of counsel for defendants.

Cross-examination by MANUEL EYRE, Esq., of counsel for defendants:

SAN FRANCISCO, *Feb.* 6, 1886.

It is stipulated and agreed by counsel for the respective parties here present that the cross-examination of Herman Royer shall be taken down in short-hand by J. F. Gawthorne and afterwards written out by him.

Cross-int. 17. I have a printed copy of your deposition in this case. It is the same as filed with the notary, George T. Knox, and sworn to by you, is it not?

Ans. That looks outside like one of them.

Mr. EYRE: I will cross-examine you from your direct testimony as printed.

Cross-int. 18. Mr. Royer, was this deposition prepared in conjunction with your counsel, Mr. Wheaton?

Ans. What does that mean, "in conjunction"?

Cross-int. 19. Was not this direct examination which is printed prepared in conjunction with your counsel, Mr. Wheaton?

Ans. Yes, sir.

29 Cross-int. 20. It was printed before you were sworn by the notary, was it not?

Ans. Yes, sir.

Cross-int. 21. You did not give this deposition orally before the notary, did you?

Ans. I read it to him.

Cross-int. 22. You took the print after it was printed and read it to him?

Ans. Yes, sir.

Cross-int. 23. And then swore to it?

Ans. Yes, sir.

Cross-int. 24. Is that all your own language in this deposition?

Ans. Part of it is and part of it is not.

Cross-int. 25. Were your answers suggested or corrected by Mr. Wheaton as printed here?

Ans. I wrote out the deposition myself and gave it to Mr. Wheaton.

Cross-int. 26. And was it corrected before it was printed?

Ans. Oh, yes; he went over it carefully and put things down just the way I wanted him to.

Cross-int. 27. What is your nationality?

Ans. I am German by birth.

Cross-int. 28. What has been your occupation prior to going into the business of manufacturing fulled rawhide?

Ans. I have been earning a living as machinist and blacksmith, also as wood-worker—you might say a millwright.

Cross-int. 29. When did you come to this country?

Ans. Well, sir, I really don't know, but it is over thirty years.

Cross-int. 30. How old are you now?

Ans. I really don't know; somewhere between forty and fifty.

Cross-int. 31. Then you were quite a young man when you came to this country?

Ans. Yes, sir; a boy.

Cross-int. 32. Did you obtain your education in Germany?

Ans. Yes, sir; I had left school then and soon after I came to this country.

Cross-int. 33. This machine referred to in your deposition,
30 patent No. 77920, patented May 12, 1868, was that invented by both your brother Louis and yourself?

Ans. Yes, sir.

Cross-int. 34. How long had you had a machine of that description in use before you applied for the patent?

Ans. That I don't remember just now. I am not prepared to answer the question, but the machine was running perhaps a month or two when I received the patent. I don't know no more the time. The patent was out and in my possession soon after I had run it.

Cross-int. 35. Was that the first machine you have had made at the Vulcan iron works?

Ans. That is the first I had made.

Cross-int. 36. Had Louis one made before that?

Ans. Yes, sir.

Cross-int. 37. Do you know who made it for him?

Ans. Yes, sir.

Cross-int. 38. Who was it?

Ans. A Frenchman by the name of Garcin; I don't know the given name.

Cross-int. 39. Is he here now?

Ans. Yes, sir; unless he is dead lately. He was in business here this last summer.

Cross-int. 40. Do you know what year he had that first machine made?

Ans. It was some four years before I started in.

Cross-int. 41. Four years before you had your machine made?

Ans. Yes, sir; before I obtained my machine.

Cross-int. 42. Do you remember the date of the making of your machine by the Vulcan iron works?

Ans. Do I remember it?

Cross-int. 43. Yes.

Ans. Oh, yes.

Cross-int. 44. What was the date?

Ans. I don't know the date.

Cross-int. 45. Could you tell by looking at your books?

Ans. Maybe; I am not positive. I cannot approximate it. I will try to do so.

31 (Mr. EYRE: I wish you would and let it be inserted in your testimony.)

Cross-int. 46. Did not your brother Louis in 1863 make belt leather by a process similar to that described in your patent No. 149,954—that is, the process patent?

Ans. Similar. My brother experimented at that time on the same line, but I cannot say that he made belt leather similar to it.

Cross-int. 47. You heard the testimony of M. A. Beck, given in the case of Royer against Beisel, No. 2283, ninth United States circuit court of California, did you not?

Ans. Yes, sir; I have heard his perjury.

Cross-int. 48. Well, Beck testified that Louis Royer worked in his shop in 1863. Is not that true?

(Mr. WHEATON: I object to the question as indirectly introducing what Mr. Beck testified to. I object to it on the ground that what Mr. Beck swore to in another case is not competent testimony in this case.

The same objection is understood as relating to all similar questions wherever they may be repeated throughout the testimony.)

Ans. I do not remember now no more, but I have heard him say something of that kind.

Cross-int. 49. Is it not a fact that your brother Louis continued to make this fulled rawhide in Beck's yard for some six months in 1863?

Ans. I know nothing of it. I never knew that he was in Beck's yard working there until something similar came out in the Cook lawsuit.

Cross-int. 50. Do you know whether or not he was working at place of his own on Folsom street?

Ans. Yes, sir; I know that.

Cross-int. 51. What year was that?

Ans. Well, I think that was 1863. I am not positive about it; think it is so.

Cross-int. 52. You know that Louis sold a belt made of fulled rawhide, did you not, to W. K. Vanderslice in 1863?

Ans. Yes, sir.

Cross-int. 53. You know that Mr. Vanderslice afterwards bought his belts from Louis until he commenced dealing with you?

32 Ans. Always bought them? I know nothing about it. I know that experimentally he has bought one belt.

Cross-int. 54. You know that he used that belt that he bought from Louis in 1863 until 1868, do you not?

Ans. Yes, sir.

Cross-int. 55. And you got a piece of that belt from Mr. Vanderslice?

Ans. I did.

Cross-int. 56. And you kept it to show the good quality of fulled rawhide?

Ans. Until I started, as an inducement to make people try what I made.

Cross-int. 57. You introduced a piece of that belt in evidence as an exhibit in that case of Royer *v.* Cook and Beisel?

Ans. I believe I did.

Cross-int. 58. That was in 1868?

Ans. I don't remember the year.

Cross-int. 59. Have you any part of that belt yet?

Ans. I don't believe I have.

Cross-int. 60. But you kept it up to 1880 to show the quality of such belting, did you not?

Ans. It drifted around the shop and by accident it has been there. No, sir; I did not show it afterwards lately, for it was superfluous; for it was an ugly looking piece and there was no inducement to show that to anybody as a means of selling. I may have shown it sometimes. I don't remember.

Cross-int. 61. Did you not tell Mr. Vanderslice in 1868, when you asked him for that belt, that you would like to have his belt to show these belts would last?

Ans. Yes, sir; I believe I did.

Cross-int. 62. You heard Mr. Vanderslice testify in 1880 in the case of Royer *v.* Beisel *et al.?*

Ans. I heard.

Cross-int. 63. Did you hear him testify then that the belt he bought from Louis in 1863 was as good as any he ever had since from you?

33 Ans. I don't remember exactly. I think something similar may have been said.

Cross-int. 64. Was not that testimony given?

Ans. I don't know. It is a matter of his opinion.

Cross-int. 65. Mr. N. W. Spaulding used your belt made by this patented process in 1869, did he not?

Ans. Yes, sir; I think so.

Cross-int. 66. He was your agent?

Ans. I don't know what kind of process it was, because Spaulding was of the earliest purchasers, and at that time there was some experimenting on that belting, a good deal of it.

Cross-int. 67. Mr. Spaulding was your agent for the sale of your belting in 1868 and 1869, was he not?

Ans. He sold my goods without any special agreement to take orders. You might call it an agent, but there was no particular advantages shown to him outside of the others. He took interest in it.

Cross-int. 68. And he was your agent for the sale of your belting? You furnished him belting to sell to others?

Ans. Yes, sir; just as I would to other dealers.

Cross-int. 69. He sold this finished product described in your patent No. 149,954 in 1869?

Ans. No, sir; there was no finished product at that time. You know very well there was a change at that time, after that time, in the mode of manufacture.

Cross-int. 70. Did you not in your cross-examination in the case of Boyer *v.* Beisel, in the United States circuit court, ninth circuit, in December, 1880, admit to me when I cross-examined you in that case that fulled rawhide sold by your agent, Spaulding, in 1869 was made by the same process described in the specification of your patent?

Ans. I believe there was a slip of a mistake in answering. It was corrected immediately after.

Cross-int. 71. I will read from your testimony in that case.

Ans. I think I remember it.

Cross-int. 72. Did you not say to me in your cross-examination in that case that you used then, in 1880, a similar proportion of tar as in 1869, and that the only difference in your process was in the mode of removing the hair?

34

Ans. I think I did say something—such a thing.

Cross-int. 73. In the spring of 1870 the fulled rawhides furnished Spaulding for sale, as your agent, were made exactly as you made them after the issuing of the patent, were they not?

Ans. The belting I sold Spaulding when?

Cross-int. 74. In the spring of 1870.

Ans. Was made exactly how?

Cross-int. 75. Virtually made exactly as you made them after the issuance of the process patent.

Ans. I will have to refer to a book to see when I stopped using potash or soda. I commenced sweating the spring of 1870. I adopted sweating in the spring of 1870, and I left the soda and potash part out.

Cross-int. 76. You commenced sweating in the spring of 1870?

Ans. Yes, sir.

Cross-int. 77. Did you lime the hides to take the hair off prior to that?

Ans. No, sir; I never adopted liming.

Cross-int. 78. You used soda and potash?

Ans. I tried liming once with a couple of hides.

Cross-int. 79. Then removing the hair by liming is not part of your patent?

Ans. No, sir.

Cross-int. 80. You told me at that time that you had ascertained that it would not do to work a limed hide in your machine, did you not?

Ans. It does not work well unless the lime is removed, which I deem not as desirable as sweating.

Cross-int. 81. Then the fulled rawhide furnished to Spaulding in the spring of 1870 was made exactly as you make it now, except, perhaps, there might have been more or less tar in it?

Ans. Yes. After 1870 I had not exactly, but essentially, the process as now.

Cross-int. 82. Do you remember Mr. Josiah Locke, a witness examined in the case of Royer *v.* Beisel, in the year 1880?

35

Ans. Yes; I remember.

Cross-int. 83. Do you remember his testifying that he bought a belt from your brother Louis in 1864?

(Mr. WHEATON: This is objected to on the ground that it is not competent.

Mr. EYRE: It is understood that objection goes all through the evidence, wherever necessary.)

Ans. I think he said something similar.

Cross-int. 84. Do you remember that he testified that that was as good as any since obtained from you?

Ans. That I don't remember.

Cross-int. 85. Do you deny that it was?

Ans. I don't know anything about it.

Cross-int. 86. Do you remember his testifying that there was no difference in the quality from that furnished by you in 1868?

Ans. I don't remember anything about it.

Cross-int. 87. You don't know anything about that?

Ans. I have a recollection. There may be something said, but I cannot say that I know.

Cross-int. 88. Do you deny that the belt purchased by Mr. Locke in 1864 from Louis was not of the same quality as that purchased of you in 1868?

Ans. It was not.

Cross-int. 89. In that case of Royer *v.* Beisel you testified, on cross-examination, that when you took out the patent No. 77920, issued to yourself and your brother, that the only difference between the process you used then and that under that process patent No. 149,954 as used by you as late as 1880 was that in 1870 you avoided the use of chemicals and alkali and added tar. That is a fact, is it not?

Ans. I am confused about the question. I may have it read again before I answer.

(The last question is here read to the witness.)

My memory is insufficient to grasp the whole question at once and answer it in sections.

Cross-int. 90. You cannot answer it?

Ans. I cannot grasp the whole complication of the question.

36 Cross-int. 91. You testified in that case that you bought the first tar in 1868. Is that a fact?

Ans. I bought tar in June, 1868, first—two bits' worth.

Cross-int. 92. You testified that the process was the same in 1869 as it was in 1880 under the patent. Is that so?

Ans. No, sir.

Cross-int. 93. And is it not a fact that the process was the same except that in the spring of 1870 you substituted sweating for chemicals in removing the hair?

Ans. That makes the difference.

Cross-int. 94. That was the only difference, was it not? Prior to that you had it removed by the use of soda and some other chemical?

Ans. Yes, sir.

Cross-int. 95. And the only difference was in the mode of removing the hair?

Ans. And greater perfection in manipulation, which I learned in the course of practice, upon which depended the success of the business to some extent—a great extent.

Cross-int. 96. Well, you were aware that a composition of tar, tallow, and rosin was well known, and it was used on leather to

soften raw spots in bark-tanned leather prior to your use of it on rawhides?

Ans. I don't know nothing about the raw spots. It had been used on tanned leather. That softening of raw spots is an invention of the infringers to weaken the merits of tar used on my hides.

Cross-int. 97. You are not a practical tanner, are you, Mr. Royer?

Ans. I have not been in the employ of tanners proper to earn my wages—to earn my living.

Cross-int. 98. What experience have you had as a tanner, if any?

Ans. My first impressions were when I lived for several years, you might say, in a tan yard, or adjoining it, and worked in the evening occasionally for amusement as a boy; and then my knowledge, as a machine man, of leather—general technical knowledge—was all the stock I had before I commenced experiments.

37 Cross-int. 99. You have never been engaged as a business in tanning, either as a business for yourself or working for another, have you?

Ans. No, sir; I have purchased leather for others.

Cross-int. 100. You know that unhairing by means of sweating was a process well known among tanners?

Ans. I do.

Cross-int. 101. And some tanners unhair by means of sweating and some by the use of lime and batting?

Ans. With or without batting; they used lime with or without batting it.

Cross-int. 102. Well, you knew in 1866, did you not, that if hides are properly batted after liming none of the deleterious effect of the lime would remain?

Ans. I know that liming and batting both hurt the hide.

Cross-int. 103. Then you could not make a good fulled rawhide if you used lime?

Ans. No. When lime remains in it it is good for nothing and it is considerable better if the lime is taken out.

Cross-int. 104. And the removing of the hair by use of lime is no part of your patent process?

Ans. No; only I discovered that when hides are limed and are dry, which is essential in my process, the lime kind of rockifies in the hide; kind of becomes rocky.

Cross-int. 105. Then a limed hide won't work well in your machine?

Ans. No, sir; not well. It can be worked, but then it is not a good leather.

Cross-int. 106. It would not make a good fulled rawhide?

Ans. No, sir; the lime has got to be out.

Cross-int. 107. Well, you made fulled rawhide in 1867 exactly similar to that made by you in 1880 and now, except the use of tar?

Ans. Exactly? No, sir. The manipulation and whole mode differing so much and so many little points were improved that I could not use the word "exactly," but "essentially."

Cross-int. 108. I will read the question and answer in your
38 cross-examination in the case of Royer *v.* Beisel, in December,

1880: "You made and sold, then, rawhide belt as early as 1867, did you not, Mr. Royer?

Ans. "I should judge that I have. I think it is about that time, 1867."

That was correct testimony at that time, was it not?

Ans. Yes, sir.

Cross-int 109. And then did you go on to testify that the only difference between the fulled rawhide made in 1867 and that made by you in 1880 was that you used tar in 1868?

Ans. That is the striking feature.

Cross-int. 110. That was your testimony in that case, was it not?

Ans. I don't know; maybe so.

Cross-int. 111. Well, it is a fact, is it not?

Ans. I have not read the testimony over lately. I don't know.

Cross-int. 112. That tar that you commenced using in 1868 was to prevent rats from eating the finished product, was it not?

Ans. Yes, sir.

Cross-int. 113. Was that the sole object of the use of tar?

Ans. Besides preventing the leather from moulding and keeping other vermin off. I also discovered it facilitates the working of the leather wonderfully.

Cross-int. 114. Then, in the cross-examination, did you not go over the process step by step, as described in your patent, and did you not then admit to me that you used this identical process in 1867, except that you did not use tar until 1868?

Ans. I have not read the testimony lately. I don't know whether you did go over that way.

Cross-int. 115. That is a fact, that the process was identically the same in 1867 as 1880, excepting using the tar in 1868?

WITNESS: Exactly, you said?

COUNSEL: Yes.

Ans. Not exactly; that word is not the correct term—essentially.

Cross-int. 116. It was essentially the same. Is that what you mean—essentially and not exactly?

Ans. There is a difference in that, I believe.

39 Cross-int. 117. Yes; there is a difference between exactly and essentially, certainly. It was essentially the same, then?

Ans. Yes, sir.

Cross-int. 118. In that cross-examination you admitted to me that your brother Louis made fulled rawhide by this process in 1861 to 1863, on Folsom street, did you not?

WITNESS: From 1861 to 1863?

COUNSEL: Yes.

Ans. My brother was a few months at it. That is all I know about it. I do not know that it was three years.

Cross-int. 119. I say between 1861 and 1863 so as not to make the years specific. You did not remember at that time the specific year, but you admitted to me that some time in those years he made

this fulled rawhide by the same process on Folsom street, did you not?

Ans. I arrived in San Francisco in 1863 and found my brother——

Mr. WHEATON (int'g):

Cross-int. 120. Was that your first arrival?

Ans. Yes, sir; twenty-three years here now, and found my brother engaged to commence experimenting on Folsom street.

(By Mr. EYRE:)

Cross-int. 121. But I ask you the question if you did not admit to me in your cross-examination in December, 1880, in the case of Royer *v.* Beisel, that your brother made it or told you he made it on Folsom street.

Ans. Please let me answer my question first.

Cross-int. 122. You can answer the other question afterwards.

Ans. I have seen my brother experimenting on Folsom street in 1863.

Cross-int. 123. Do you remember that in your original specification in that application for a patent signed Nov. 30, 1872, you claimed as follows: "The use of a mixture of wood tar, rosin, and tallow applied to hides made into leather by mechanical processes"? That was your claim in your first application, was it not?

Ans. I don't know nothing positive about that, but if you wish to have the original answer I can refer to the books and to my first letters and references.

40 Cross-int. 124. Your original application for a patent was for an invention of a mechanical process; is not that a fact?

Ans. I don't know whether it was the first, second, or third. I cannot remember.

Cross-int. 125. Was not that claim in the original patent and specification?

Ans. I cannot remember just now to fix the dates and the wording and the words of that transaction.

Cross-int. 126. Do you recollect now that your claim was for "the use of a mixture of wood tar, rosin, and tallow applied to hides made into leather by mechanical process," in those identical words?

Ans. I am not prepared to answer that positively.

Cross-int. 127. Do you recollect that the claim was refused for that on the ground that it was not new?

Ans. There has been a refusal. I don't know exactly now why.

Cross-int. 128. Mr. Serrell, was your agent in taking out that patent?

Ans. He was one of them.

Cross-int. 129. He was the last one, was he not?

Ans. In that patent, I believe; yes.

Cross-int. 130. Did not Mr. Serrell inform you that the claim which I have just read was refused?

Ans. I don't remember any more. I can bring the transcript, if it is desired.

Cross-int. 131. Was not that claim afterwards stricken out?

(Objected to on the ground that the certified copy of the file-wrapper and contents of the Patent Office is the best evidence.

Mr. EYRE: I will offer the certified copy of the file-wrapper and contents, and ask permission to allow Mr. Thurston to file it when obtained.

Mr. WHEATON: If you want to cross-examine the witness upon it put it in now.

Mr. EYRE: I have not got it now. I offer it in evidence in respect to this: I offer it to show what construction the patentee himself placed upon his invention and to show what changes were made in the original specification; the changes and the significance
41 of those changes as revealed by the history of the case as contained in that file-wrapper and contents.

Mr. WHEATON: We object to your cross-examining the witness on something that is not produced.)

Cross-int. 132. How many hides did you buy in 1868—have you a memorandum with you?

Ans. I believe I have on this point. I ought to have a whole library with me to answer all the questions. I have some of them with me, though. In 1868 I bought 351 hides.

Cross-int. 133. From whom did you buy them—Funke & Wasserman?

Ans. I don't remember now.

Cross-int. 134. Did you not receive from that firm alone in 1868 378 hides?

The WITNESS: In 1868?

COUNSEL: Yes.

Ans. My careful examination shows 351.

Cross-int. 135. Paid for?

Ans. I have paid for all I bought so far.

Cross-int. 136. You testified in the deposition in Royer *v.* Beisel that you bought 351 hides in 1868 from Funke & Wasserman. Did you buy hides from any one else in that year?

Ans. I cannot tell that question now. I don't know whether I did testify that way. If I did testify it was so, it is so.

Cross-int. 137. But I ask you now if you bought from anybody else.

Ans. I could not tell. These things depend on books; they do not depend on memory.

Cross-int. 138. Well, have you a memorandum of the number of hides that you bought from that firm in 1869?

Ans. I have made a note in a pocket-book here that shows I had 481.

Cross-int. 139. Now, when I cross-examined you in that case of Royer *v.* Beisel I asked you if you had not received from that firm in the year 1869 500 hides, and you answered me, "They may have put in more, but I did not buy that number." Was that a correct answer at that time?

42 Ans. I know they have charged me once a big sum of money; something like $100, and they may have made a mistake; they did not ask me the sum. They had another book, and I don't know anything about it; but this is what I know; all that I have testified to.

Cross-int. 140. I ask you if you did not testify there that they might have put in more than 481 hides, but you only paid for 481.

Ans. That is all I received and I paid for.

Cross-int. 141. Your answer is in the following words: "They may have put in more, but I did not buy that number."

Ans. Well, according to that, there was a disagreement about that. They charged me once a hundred dollars more, and I did not know particularly that cause. I never saw the mistake they made and I don't know how it occurred.

Cross-int. 142. You received and paid for 481?

Ans. I say that in 1869 I have bought 481 hides. I don't know anything about Funke & Wasserman just now. It may have been them and may be from others.

Cross-int. 143. Do you remember the price of these hides?

Ans. I don't know nothing about it.

Cross-int. 144. Can you tell me from your knowledge?

Ans. The price of hides is variable.

Cross-int. 145. Can you give me the limits?

Ans. I don't know.

Cross-int. 146. You cannot tell whether you paid ten dollars?

Ans. I did not pay ten dollars.

Cross-int. 147. Did you pay five dollars?

Ans. It may have been more than that.

Cross-int. 148. How much will a hide weigh?

The WITNESS: What kind of a hide?

Cross-int. 149. Were these hides dry or wet?

Ans. Green salted.

Cross-int. 150. How much will a green-salted hide average?

Ans. Forty to eighty, more or less.

Cross-int. 151. Forty to eighty pounds, you mean; and what was the price per pound?

Ans. May have been nine cents to ten cents a pound.

43 Cross-int. 152. That would be from $4 to $8 a hide, would it?

Ans. Yes, sir.

Cross-int. 153. You worked all these hides up in that year?

Ans. I don't know whether I worked them all up. I very likely did not.

Cross-int. 154. What would you do with them if you did not work them up?

Ans. Keep them ready to work the next year. Those I bought last. Buying hides on Dec. 31, I do not expect to have it worked up on that day and may not be finished yet until the last of January of next year.

Cross-int. 155. In the same mode, in December, 1868, you kept over hides, too, did you not?

Ans. Yes, sir; I guess so; I don't know; may have bought the last in November and may not. I don't know now.

Cross-int. 156. Do you believe in a Supreme Being as regarded and called a God?

Ans. If you will define the meaning of that word, "Supreme Being," I will answer you whether I do or not.

Cross-int. 157. I ask you if you believe in a Supreme Being under whose dispensation you are morally accountable for your acts?

Ans. First define to me the meaning of "Supreme Being" and then I will tell you whether I believe in dispensation.

Cross-int. 158. Do you believe in the existence of anything under whose dispensation you would be morally accountable for your acts?

Ans. I believe in anything that presents itself to my senses.

Cross-int. 159. Then you do not believe in a Supreme Being who does not present himself to your senses?

Ans. Things that do not exist within human experience and ascertainable by human conception are outside the sphere of my recognition.

Cross-int. 160. You testified in this deposition in your examination-in-chief concerning the patent to the fulling machine or patent No. 77920, issued to your brother and yourself; you testified concerning that. Who invented that machine?

Ans. My brother and myself.

44 Cross-int. 161. Can you tell me what part you had in the invention and what part he had?

Ans. Well, my brother was the first one that experimented on the machine, and drew my attention to the matter of working it on that principle—the possibility—and my part of it afterwards was the endwise pressure, with application of compressing the hide, and the improvement in the tar and the endless experiments with the machine are all mine.

Cross-int. 162. I mean as to the machine. Do you know what kind of a machine he used in 1861 or 1862 or 1863?

Ans. In 1863, when he was experimenting, he used the machine that was made by Garcin, without endwise pressure.

Cross-int. 163. It had the upright shaft, had it?

Ans. It had a horizontal shaft, that machine had, and it was without any endwise pressure.

Cross-int. 164. Was there anything to surround the central shaft to rotate the hides inside?

Ans. Bars.

Cross-int. 165. Just the same as you had in the patent afterwards?

Ans. Not the same; similar.

Cross-int. 166. Then the hide was attached to this central shaft, was it?

Ans. It was.

Cross-int. 167. Do you remember what motive power?

Ans. He had a horse.

Cross-int. 168. Did you ever see that machine that was out in Beck's yard?

Ans. No, sir; this was a yard that was a new place.

Cross-int. 169. On Folsom street?

Ans. Yes, sir. He was there getting up experiments on this. I have seen a place on Folsom street further down where my brother was said to have experimented upon.

Cross-int. 170. He had that rude machine—that first machine—as early as 1861, did he not, or do you know?

Ans. That I don't know.

45 Cross-int. 171. You are now the owner of the whole of that patent by assignment from your brother, are you not?

Ans. I am.

Cross-int. 172. And including any claim for damages for infringement?

Ans. I am.

Cross-int. 173. When was that purchase made?

Ans. A few months previous to the expiration of the patent.

Cross-int. 174. Since this suit was commenced—since Feb. 6, 1884?

Ans. I know nothing about the date. I cannot keep everything in my head.

Cross-int. 175. You don't recollect the date of assignment from your brother Louis?

Ans. I could if I saw the assignment.

Cross-int. 176. Have you the assignment of it?

Ans. No, sir.

Cross-int. 177. In this city?

Ans. I don't know where it is. Mr. Wheaton can tell you.

Cross-int. 178. Do you know where Louis is now?

Ans. I believe he is in England.

Cross-int. 179. Have you any objection to telling me what you paid for that?

Ans. If it is not necessary to answer, I don't see what figure it cuts to answer that question.

Cross-int. 180. Have you any objections to answering it?

Mr. WHEATON: Tell him you have.

Ans. I have objections.

Cross-int. 181. You decline to tell me the amount that was paid for Louis' interest?

Ans. Yes, sir.

Direct examination resumed:

Int. 182. In the machine that Louis had constructed and was using on Folsom street in 1863 did he make that machine a success as far as it went?

Ans. No, sir.

46 (Mr. EYRE: Does he know that?

Mr. WHEATON: Of course he knows. He was watching it.)

Int. 183. How long did Louis continue to experiment or work in his efforts to produce fulled rawhide after you first saw him, in 1863?

Ans. I came here in April, 1863. No experiments were made with my brother at that time. He was going to commence experiments. I went into the country and returned soon after the 4th of July. My brother experimented then, and ceased within a week or two after my return. There was no belt and no machinery to experiment with; there was only the bare ground when I came there; soon after the 4th of July he quit experiment.

Int. 184. That is the last?

Ans. Yes, sir.

Int. 185. Now, when did you commence your experimenting?

Ans. That was in 1867, I think.

Int. 186. Now, between the time that your brother Louis quit the experimenting, about July, 1863, and the time you began experimenting, in 1867, did either one of you—that is, either you or your brother Louis or any one else, to your knowledge—make any efforts to manufacture fulled rawhide?

Ans. None whatever.

Int. 187. When your brother Louis quit trying to make fulled rawhide, in 1863, when, if ever, did he commence?

Ans. He never commenced again, not to my knowledge, in this country, except his attempt in St. Louis with Schultz and some other parties I don't know of.

Int. 188. When was that?

Ans. After he left San Francisco he commenced in the East.

Int. 189. Give about the year.

Ans. Of course, the testimony somewhere will show that.

(By Mr. EYRE:)

Int. 190. How do you know these things, Mr. Royer, of your own knowledge?

Ans. I have letters from my brother that he writes me what he has done there and I have seen sworn testimony to that effect.

Int. 191. Do you know of your own knowledge?

Ans. I don't, from a personal view.

47 (By Mr. WHEATON:)

Int. 192. Was it before or after you had made a success of it in 1871?

Ans. After.

Int. 193. What did your brother Louis go to doing after he quit his efforts to make fulled rawhide in 1863?

Ans. He was working in the leather business; acting as a salesman in a harness store.

Int. 194. For how long?

Ans. I cannot fix the figures now; and finally he studied medicine.

Int. 195. Where did he go to study medicine?

Ans. He read medicine here, and cut human flesh at some institution here.

Int. 196. In San Francisco?

Ans. In San Francisco for several years. When we lived together he sometimes had dead bones, arms, and legs stinking in the room, and I always had to tell him there was something wrong again, and he would tell me he had a leg there under the bed.

Int. 197. That was for dissecting purposes?

Ans. Yes, sir. We had two rooms, and he made a dissecting-room of one of them.

Int. 198. How long did you and your brother remain together after he quit trying to make rawhide in 1863?

Ans. We were in town, too. It was only for some time; maybe for a year or longer. We lived together. We had rooms together just about the time when I was commencing to experiment, and we roomed together.

(Mr. EYRE: You took out the patent together in 1868, did you not?

Mr. WHEATON: Of course they did. It shows for itself.)

(By Mr. WHEATON:)

Int. 199. Is the use of tar or its equivalent absolutely essential in the manufacture of the fulled rawhide?

Ans. Yes, sir.

Int. 200. Had Louis, to your knowledge, ever made any use of tar prior to 1871?

Ans. Never used any tar.

48 Int. 201. Was there any tar in that piece of the Vanderslice belt which you had?

Ans. No, sir.

Int. 202. How long has it been well known that you could reduce rawhide to a soft, pliable condition by mechanical manipulation—that is, bending it back and forth or twisting it after it is once tanned dry or nearly dry?

Ans. I don't know whether it was before. It was considered impossible to make it that way.

(Here the last question is read.)

Ans. Since I discovered it and proved it was. It was considered absolutely impossible before.

Int. 203. And you did reduce rawhide to a soft condition by manipulation—to a perfect condition?

Ans. Yes, sir; it was approximately softened, but not thoroughly, which they have done something at it, partly tanning and working it.

Int. 204. Now, if a belt had been made of rawhide, after it was partially softened in that way, and that belt continued in use, running around pulleys, do you know whether that would keep it in a soft condition or not?

Ans. A belt partly made soft or entirely, you mean?

(Here the last question is read the witness.)

Ans. That running would keep it in a soft condition, of course.

Int. 205. Do you know why your brother Louis quit trying to produce fulled rawhide in 1863?

Ans. Yes, sir.

Int. 206. What was the reason?

Ans. He considered it hopeless to try to manufacture or to make hides soft. He thought that it would not go. He thought they could not be made entirely and thoroughly soft all through. His hides would tear to pieces and burn, and some would be cut all over, or, at least, cut in spots.

(By Mr. EYRE:)

Int. 207. Are you speaking now of your own observation?

Ans. My own observation.

Int. 208. So far as Louis had used the machine with horizontal shaft and the bars around it, had his experiments proved whether or not that machine would make fulled rawhide?

49

Ans. It was impossible to make fulled rawhide with that machine—that is, a merchantable and perfect article. It was without endwise pressure.

Int. 209. When the endwise pressure was added did the whole entire machine differ in the manufacture of fulled rawhide from what it did as without the end pressure?

Ans. Yes, sir; the endwise pressure compelled all the hides to undergo that systematic, continuous, and unceasing, short, bending pressure, generating heat uniformily in consequence?

Int. 210. How many hides did you purchase in 1870?

Ans. I don't know.

Int. 211. How many in 1871?

Ans. I don't know.

Int. 212. Can you tell approximately how many you had in 1871 and 1872?

Ans. I had more; I don't remember; I paid for them at the time. I did not keep the regular books; it was all in a pocket-book.

Int. 213. State about how much your business increased in 1872.

Ans. In 1872, I was doing a good business then.

Int. 214. Can you give an idea about how many hides you were using?

Ans. That I don't know, but my business increased after 1872 considerable.

Int. 215. When the evidence on your direct examination was written out was a single fact put in there except what you had given to me?

Ans. Nothing then was written down, but that was the positive fact. The evidence is in keeping with previous examinations in every case.

Int. 216. In assisting in writing it out did I change in any instance

any fact and make it different in any respect from what you had already given it to me?

50 Ans. No; not the slightest degree of anything has been changed.

Int. 217. State whether or not your using of the process from the time you commenced in 1876 up to the time you applied for your patent was in public or whether it was in secret use.

Ans. It was by the best possible means kept secret.

Cross-examination resumed.

(By Mr. EYRE:)

Cross-int. 218. Mr. Royer, you say tar is an absolute necessity in making a merchantable article of fulled rawhide, and Louis never used any tar. How do you, then, account for the fact that the fulled rawhide sold by Louis to Mr. Vanderslice was used by him for five years and gave perfect satisfaction?

Ans. In that Vanderslice belt it was a belt that ran over large pulleys, where a thorough softness or the want of it did not show any defect, and where also the rats could not get at or mice to gnaw it. It was overhead, under the floor, the lowest floor, and below the upper floor, and where the rats would have to climb up the walls or cast iron to get on the belt.

Cross-int. 219. Was not this belt made by Louis Royer a merchantable article of fulled rawhide?

Ans. No, sir.

Cross-int. 220. Well, it was as perfe*rfec*tly satisfactory to Mr. Vanderslice as any he ever bought from you?

Ans. I believe he has said so. It has appeared to me that way.

Cross-int. 221. You say running around pulleys would keep a belt of fulled rawhide in a soft condition?

Ans. Yes, sir.

Cross-int. 222. Where did you acquire that information?

Ans. That is my opinion, based upon that one fact there, and generally I should judge it would keep soft.

Cross-int. 223. But you never saw a case where a belt of fulled rawhide was kept in a soft condition by running around pulleys?

Ans. Except that one of Vanderslice's, and I believe I remember one other belt. I don't know, though.

Cross-int. 224. Were not hides made soft and fit for use by mechanical means many years before your application for a patent?

Ans. Well, they have been experimenting on that.

51 Cross-int. 225. Was not buckskin made by mechanical means—without any tanning?

Ans. In the buckskin they can take the hairs off with ashes, and, besides, buckskin is a hide of a far different construction than any other.

Cross-int. 226. Do you pretend to be the first to discover the fact that hides could be tanned to a softness as to be used as riatas or anything of that description by the use of mechanical means and grease?

Ans. I don't know whether any hides are used as riatas. They were used in pure hides.

Cross-int. 227. Do you know how Russia leather was made?

Ans. I know some leather that has been in Russia. I know how that has been made.

Cross-int. 228. Has not that been made by mechanical means—without any bark tanning?

Ans. No, sir; it has always been tanned with birch tar, which gives it that peculiar smell called Russia. It has been tanned and afterwards impregnated with birch tar.

Cross-int. 229. Did you not say in your application for a patent that you are aware leather has been made by mechanical means?

Ans. Yes, sir; experiments upon; heard of it; enough tried and failing in it. They have been trying it and failing; never could succeed.

Cross-int. 230. Do you claim that nobody ever made leather by the use of mechanical means and a dubbing of oil or tallow before you applied for this patent?

Ans. It can be made no leather by dubbing alone. There has got to be some tanning or some mechanical action.

Cross-int. 231. What do you mean by tanning?

Ans. Well, I make a distinction there as between chemical action and mechanical action. Tanning is very different. Tanning proper I would consider the insoluble combination of tannic acid with animal hide. That is tanning proper.

Cross-int. 232. I ask you if you do not know as a fact that you are not the first to discover that hides can be made into a
52 merchantable article by mechanical means and the use of some lubricant like grease or tallow.

Ans. I cannot grasp the question; it has too much negative. I cannot say how far yes or no goes, and my memory is not sufficient to retain all the fors and against, the ifs and conditions. If you will simplify your question I will answer everything very plain.

Cross-int. 233. Do you know what the action of tar is upon open raw streaks in bark-tanned leather?

Ans. I don't know; I have heard a good deal about it.

Cross-int. 234. In this case of Royer *v.* Beisel you answered me that you believed that if tar was put on raw streaks and stayed there a hundred years it would not have any effect.

Ans. It would not go through the rawhide.

Cross-int. 235. That is your opinion still?

Ans. Raw streaks—what they call raw streaks—is something very different.

Cross-int. 236. You know when a hide is bark-tanned that sometimes raw streaks remain in the centre of the thickest portion of the hide. Do you know that fact?

Ans. When it is bark-tanned it is tanned—it is not partially tanned—and it is just the men who neglect that experiment with tar or pretend to experiment, but in practice such things do not happen.

Cross-int. 237. You answered me, as I have stated in that case, in

the following words: "I believe that if tar is put on raw streaks and stays there one hundred years it would not have any effect." Is that still your opinion?

Ans. If tar is put on rawhides it will stay there a hundred years and never go through.

Cross-int. 238. That is not the question I asked you.

Ans. I don't know the effect on raw streaks, but I know this fact that I am speaking of now, and I have no copy of my testimony and don't know about the truthfulness of these statements there; I can't testify to them now. You base your question upon an assumption that such and such was said. I don't know; it may be so or not.

Cross-int. 239. Did you not answer me, in that connection, that that was your knowledge; not your opinion, but your knowledge?

53 Ans. I don't know, not just now, without referring, whether I did or not.

Cross-int. 240. Have you any knowledge on the matter now?

Ans. I have.

Cross-int. 241. I will ask you, then, is it your opinion or knowledge now, as you say, is it your knowledge now, that tar put upon raw streaks in bark-tanned leather would stay there a hundred years and have no effect?

Ans. If the raw streak is there—absolutely raw—it will not go through.

Cross-int. 242. Do you say that tar has no effect on rawhide?

Ans. It will not go through.

Cross-int. 243. What did you use it for, then?

Ans. When?

Cross-int. 244. In your fulled rawhide—in preparing the fulled rawhide.

Ans. Now, I presume it is used in conjunction with mechanical action. Before you assumed that it was put on quietly and hung there. That is the difference.

Cross-int. 245. You say it was in the first instance merely to prevent the attack of rats and mice, did you not?

Ans. Yes, sir.

Cross-int. 246. Had you any other business in 1868 except this of making and selling fulled rawhide?

Ans. No, sir.

Cross-int. 247. In 1869?

Ans. No, sir.

Cross-int. 248. You had no other means of subsistence in those years except the profits derived from this business, had you?

Ans. No other means but my saved capital and credit, the good will of some friends and customers; running behind constantly.

Cross-int. 249. Are you not aware that tar was used on Russia leather long prior to 1868 for the purpose of preventing vermin from attacking the leather?

Ans. No, sir; never was aware of that. The Russia leather impregnated with tar and then used for binding books or papers

would prevent rats or keep furs and would prevent rats from
54 attacking such furs or books to be eaten, and the Russia leather it is first proof against vermin or rats.

(By Mr. WHEATON:)

Cross-int. 250. Without the tar?

Ans. Oh, yes; the object is just the same. You put birch tar on and the rats would not touch it; just the same thing. If you put furs away, the moths eat it; but if you put birch tar near the furs, the moths will not go near. The preservation is not for the leather.

Cross-int. 251. In your suit against Beisel that you have been giving testimony about the decree was in your favor, was it not?

Ans. It was.

It is stipulated and agreed that the foregoing testimony may be printed and a printed copy signed by the witness.

Evidence for Defendants,

Taken pursuant to the sixty-seventh rule of the Supreme Court of the United States, in equity, as amended, before me, Isaac H. Southwick, Jr., special examiner.

PROVIDENCE, R. I., *April* 5, 1887.

Present: Frederick P. Fish, Esq., of counsel for complainant; Wilmarth H. Thurston, Esq., of counsel for defendants.

Deposition of William Coupe.

Direct examination by WILMARTH H. THURSTON, Esq., of counsel for defendants:

Int. 1. What is your name, age, residence, and occupation, and are you one of the defendants in this case?

Ans. William Coupe; age, fifty-three years; residence, South Attleborough, Mass.; occupation, tanner and leather manufacturer, and I am one of the defendants in this case.

Int. 2. Are you the William Coupe who has previously testified in this case?

55 Ans. I am. I was called by the complainant to testify, and complied with his request.

Int. 3. You say that you are a tanner and leather manufacturer. Please state how long you have been engaged in such business, and, generally, what has been your experience therein.

Ans. I am a tanner and manufacturer of leather by profession. I first went to the business in the year 1852. I have had a very wide experience since that time in the tanning and currying of shoe leather; also in the manufacture of various kinds of what is generally known as "factory leather," consisting of lace-leather, both tanned, tawed, and rawhide; also in various kinds of picker leather, tanned, tawed, and rawhide; also of belt leather of various descriptions, both rawhide, partially tanned and dead tanned; also various kinds of apron

leather; also a style of leather that is made of a perfectly green rawhide, which is produced and cured without the aid of any tanning materials, grease, or anything of that nature.

Int. 4. Please state a little more particularly your experience in the manufacture of the various kinds of leather referred to by you, stating briefly where and how you have derived that experience, and whether as a workman or as an employer, or both.

Ans. My first experience was in a calfskin tannery in Connecticut. While there I worked in the beam-house, the tan yard, also in the currying shop. I remained there until I thought I had got a good practical knowledge of that branch of the business. I then left there and went to Cambridgeport, and went to work in a general currying shop where they curried the various grades of leather, consisting of grain leather, wax leather, calfskins, splits, and russet leather. After remaining there for a length of time I went up to Pawtucket, R. I., and there became engaged by James Davis & Co. in the manufacture of factory leather, consisting of lace-leather, picker leather, belt leather, and belting. While there I was engaged in the various departments, the tan yard, the currying shop, and belt shop. After remaining there for a short length of time I went to Baltimore, and there took charge of a belt shop. I left there and crossed the plains to California. I left California and went into the navy; remained there for a couple of years, after which I re-
56 turned to Pawtucket, R. I., and again went to work for James Davis in the various departments of his establishment. I remained there until the breaking out of the war, at which time I went into the army. In the early part of 1863, on account of the sickness of my wife, I resigned my commission and returned home to Pawtucket, R. I., where I again went to work for James Davis. After working for him for a short time I left and went to work for another firm in the same town, in the same line of business, by the name of Fairbrother & Fales. I continued in their employ as foreman of the currying department up to June, 1864. Business got a little slack at that time, so I started a notion store. I ran that for some little time, and then gave it up, and in the winter of 1864 I went to Europe. While in England I visited a number of the large mills there, and posted myself as much as I possibly could in regard to lacings and belting. I returned in the early part of 1865, and again went to work for Fairbrother & Fales. I continued there for a short length of time. They desired that I should become general superintendent of their establishment. I declined to do so, for the reason that the compensation they offered me was not what I considered sufficient. In September in the same year I started business for myself in a small way, and have continued from that time to the present, and have manufactured all the various kinds of factory leather, and have been located all the time since 1865 at South Attleborough.

Int. 5. You have referred to "factory leather." Please explain briefly what is meant by that, as distinguished from other kinds of leather.

Ans. Factory leather, as distinguished from other kinds of leather,

are those kinds of leather which are used in cotton, woollen, and silk mills, and other manufactories, consisting of lace-leather, picker leather, belt leather, apron leather, and roller skins. The other kinds of leather consist of all kinds of leather used in the manufacture of shoes, bag leather, glove leather, hose leather, and quite a number of other kinds which are too numerous to mention.

Int. 6. The patent to Royer, No. 149,954, in suit in this case, purports to be for an improvement in the treatment of rawhide, especially for the use of belts and laces. To which one of the
57 classes of leather above referred to by you do you understand the patent refers?

Ans. I understand the patent to refer to that class of leather called factory leather.

Int. 7. And is it to that class of leather—to wit, factory leather—that the matters involved in this suit, as you understand it, relate?

Ans. I understand it relates to that class of leather.

Int. 8. Before coming to the details of the manufacture of factory leather will you please state generally how it differs from other leather—as, for instance, shoe leather?

Ans. The general mode of manufacturing factory leather is different from that employed in the manufacture of shoe leather, for the reason that different functions are required from factory leather than what is from shoe leather. In the manufacture of factory leather it is always desirable to produce an article of leather that will stand a great tensile strain and one that is very durable. It is needful, especially in the production of lace and picker leather, to be careful that you do not impair the natural strength of the hide. Consequently different methods have to be used to attain this object from those employed in the production of shoe leather, as no great tensile strain is required in shoe leather; also as shoe leather is required to shed water, it is filled up with vegetable tannin, which entirely unfits it for either lace or picker leather for the reason that to the greater extent a hide is impregnated with any kind of tanning materials its tensile strength is impaired.

Int. 9. You say that shoe leather is filled up with vegetable tannin. State whether or not such leather is ordinarily thoroughly tanned and known as tanned leather and whether this constitutes a difference between such leather and the factory leather, to which you have referred.

Ans. Shoe leather, as a rule, is thoroughly tanned. It is always the design to thoroughly tan shoe leather, but ocasionally, through neglect, a pack of leather may be taken out of the liquors a little slack tanned, or, in other words, not entirely filled up. Under these circumstances, if the leather was cut right through the slack-tanned portion of the side or hide, you would detect what is
58 ordinarily called in the art a "raw streak." It is always understood that shoe leather is tanned leather. Untanned leather is not adapted for shoe-leather purposes. While yet it will stand a great tensile strain, it is not impervious to water. The tanning does, to a very great extent, constitute the difference between

shoe leather and factory leather—especially that portion of it which is used for picker leather and lace-leather.

Int. 10. You say that the tanning does constitute a difference between shoe leather and factory leather. What do you mean by that? Do you mean that the one is intended to be thoroughly tanned and the other is not, or what?

Ans. The idea that I wish to convey is that in the various kinds of factory leather, such as lace and picker leather, a leather that will stand a great tensile strain is required. Consequently the leather is left raw, which gives it this particular quality which it would not have if thoroughly tanned. Shoe leather is tanned leather. Picker leather and lace-leather is either rawhide softened by a mechanical process or tawed leather—that is, leather which is partially tanned with chemicals.

Int. 11. Please state whether there is any difference in the methods employed in currying tanned shoe leather and untanned or partially tanned factory leather. And, if so, in what does that difference chiefly consist?

Ans. There is a slight difference between the method employed in the production of the two kinds of leather. Shoe leather, after it comes from the liquors, is skived, scoured, hardened, dampened, stuffed in a stuffing wheel. After coming from the stuffing wheel it is "set out" on suitable machines for that purpose, such as the Fitz-Henry machine. It is then hung up and dried. After it is dried it is whitened, blacked, pasted, gummed, trimmed, measured, when it is ready for market. That is simply one grade of leather or one class of leather. There are a number of other classes of shoe leather on which the method of currying varies from the above method somewhat, but they are all substantially the same, simply differing a little in detail. In the currying of lace and picker leather the method differs in detail somewhat. Take, for instance, the tawed lace-leather. After it comes from the tawing liquor it is
59 hardened. Previous to the hardening it is given a coat of grease. When pretty near dry, it is taken down. The overdry places are dampened so as to make the leather as uniform as possible. Then they are packed down in a pile to mull, temper, or season. They are then subjected to a machine to be struck out. After they are struck out they are shaved with the currier's knife. They are then redampened, stuffed in a stuffing wheel or by hand. If stuffed in the wheel, after coming out of the wheel they are set out and then they are hung up to dry. When they are dried they are in a horny condition. They are then greased with various kinds of stuffing, subjected to some kind of a fulling operation for the purpose of softening them and working the grease into them. They are then set out, trimmed, measured, and ready for market.

Int. 12. Comparing the two methods of currying leather described by you in your previous answer, please state briefly what is the characteristic difference between the two.

Ans. The difference in the method of treatment of one over the other is simply the softening and fulling the grease into the leather

in a dry state. In the shoe leather there is no necessity for this extra fulling which takes place in the lace-leather, for the reason that the shoe leather has been thoroughly tanned, and there is no rawness in it.

Int. 13. Please explain what you mean by "fulling" and what you mean by "stuffing." Describe what is done and for what purpose it is done in the case of fulling and the same in the case of stuffing.

Ans. What I mean by fulling is subjecting the hide to some kind of mechanical action for the purpose of softening and working in the grease. What I mean by stuffing is the application of a compound applied and worked into the leather or hide during the process of fulling. There are a variety of methods by which this fulling operation is carried on. There is the old pin block, the ordinary pounding machines, wheels, and drums, with pins in them, ordinary fulling stocks, and machines for boarding and breaking. These fulling and stuffing operations can be carried on in either, or by either, of the above machines enumerated, some doing the work more advantageously than others. The purpose of the stuffing and fulling is substantially to soften and cure the hide.

Int. 14. What class of leather do you manufacture, and to which class have you especially directed your attention, and with which class have you had the greater experience?

Ans. The class of leather that we manufacture and that I have had the greatest experience in is factory leather.

Int. 15. And whether or not you have especially directed your attention to that class of leather and to the methods of manufacturing the same?

Ans. My attention has been directed to that particular class of leather for a long time.

Int. 16. Please state the different methods known and used for converting hides into leather for practical uses.

Ans. There are three separate and distinct methods for converting hides into leather for commercial use. The first is what is known as the ordinary tanning method. That is done by the uniting of the various kinds of vegetable tannin with gelatine and fibre. The second method is the method of tanning the hides by the use of minerals or chemicals. The third is by curing the hide by the means of fulling in various kinds of grease and curing the hide in that way. There is another method that consists partly of the second and partly of the third combined. In this method the hides are subjected to the mineral or chemical tannin to a greater or less time, as occasion may require. Sometimes the tannin just enters the surface and sometimes goes quarter way through, sometimes half way through, the balance being left entirely raw or untanned. The process is then completed by the third method, as spoken of before, by stuffing and fulling, by fulling the stuffing or grease into the raw part of the hide, which entirely cures it and fits it for the purpose designed.

Int. 17. For how long have these several methods which you have

referred to been known and used in the manufacture of leather from hides?

Ans. I have known them of myself almost ever since I first went into the business, namely, in 1852. I mean to state by this answer that I became acquainted with that fact shortly after I went
61 into the business. From my own personal knowledge I have known the first two methods to be practised from 1852 up to the present time; the third method, from the latter part of 1853 to the present time; the combination method, from 1853 to the present time.

Int. 18. State whether or not, at the time you began to learn the leather business, you found the several methods referred to to be well known and commonly practised in the art.

Ans. When I had been some two or three years at the business I found that these methods were in common practice.

Int. 19. Coming now to your own personal experience, please state what was your first experience in the manufacture of leather which was not thoroughly tanned with vegetable tannin—that is, with leather other than that commonly known as tanned leather.

Ans. My first experience in that line was at the tannery of James Davis, at Pawtucket, R. I., in the latter part of 1853. While there I became acquainted with the method of manufacturing chemically-made leather, or, in other words, leather tanned by a chemical process; also tawed leather, which was manufactured by a combination of chemicals, to tan the leather part way through, leaving a part of the leather raw, or, in other words, an inside stratum of rawhide, and then completing the process by the method heretofore spoken of, by stuffing and fulling the greaseinto it, which left the leather ready for the currying process.

Int. 20. State whether the methods referred to in your last answer were being carried on regularly at Davis's, at the time referred to, in the manufacture of leather for the market, and whether such leather was sold and used, or what was the fact.

Ans. It was the common practice at that time to manufacture leather in that way at Davis's. The leather was finished and sent up into the salesroom, and from there it was sent off. I suppose it was sold, but of my own knowledge I do not know.

Int. 21. Was it manufactured in large or small quantities?

Ans. It was manufactured in what I should consider quite large quantities—anywhere from one hundred to three hundred hides a week.

Int. 22. Whether or not its manufacture was continued; and, if so, for how long? State what are the facts.

62 Ans. To the best of my knowledge, it has been continued from that time up to the present, to a greater or less degree.

Int. 23. Whether or not the manufacture of this kind of leather referred to by you as manufactured at Davis's was a regular branch of the business of that concern from 1853 down.

Ans. It was a regular branch of that concern from 1853 down, with sometimes a little variation in details.

Int. 24. For what purposes or uses was this leather manufactured?

Ans. For lace-leather.

Int. 25. What, if you know, were the chemicals used to tan so much of the leather as was tanned?

Ans. There was a variety of materials used, consisting of salt, alum, sulphuric acid, for the production of one kind; for the production of another kind, salt, alum, sulphuric acid, muriatic acid, nitric acid, and muriate of tin and gambier; for another kind, the hide was simply cured with grease consisting of tallow and oil. There was still another class of leather, which was tanned with sulphuric acid, glauber salts, sal-soda, and gambier; for another kind, salt and alum were used without sulphuric acid.

Int. 26. You have referred in your last answer to one kind of leather which was simply cured with grease consisting of tallow and oil. Do you mean that this leather was also manufactured at Davis's?

Ans. That particular style of leather was manufactured at Davis's in 1863.

Int. 27. Do I understand that this last leather manufactured at Davis's in 1863 was manufactured by the third method enumerated by you in a previous answer?

Ans. The leather just spoken of was manufactured by the third method spoken of in a previous answer—by curing, by stuffing, and fulling grease into it.

Int. 28. Whether or not the leather so manufactured at Davis's in 1863 was in any way or in any part tanned, or whether it was pure rawhide throughout.

Ans. It contained no tanning of any name or nature. It was a pure rawhide, softened by mechanical action, and cured by fulling grease into it.

63 Int. 29. Please state whether it was anything new in 1863 to convert hide into leather without the use of any tanning whatever, but simply by mechanical action and by fulling grease into it.

Ans. There was nothing new about it. It was a method that had been a long time employed.

Int. 30. Do you know anything about how long such method had been employed prior to 1863?

Ans. I knew of the method in the latter part of 1853 being employed on the partially rawhide leather, but never knew it to be employed on the pure rawhide leather previous to 1863.

Int. 31. How does the method referred to compare with the method employed for making glove leather and the like?

Ans. It is substantially the same, a variation sometimes being made in the different compounds fulled into the leather.

Int. 32. Whether or not the method of preparing leather referred to, to wit, solely by mechanical means, by fulling it and stuffing it with grease, had been employed in the manufacture of glove leather prior to 1863, and whether or not it was an old and well-known method at that time and prior thereto.

Ans. To the best of my knowledge, that method was used and well

known long prior to 1863, both for the manufacture of glove leather and for leather for other purposes.

Int. 33. How does the method referred to compare with the method commonly known and understood to have been employed for many years by the Indians and uncivilized races in preparing leather for various uses?

Ans. This method, as I understand it—that is, the method of working grease into hides by mechanical action—has been known for a long time. It is one of the three ancient underlying principles of converting hides into leather.

Int. 34. Coming now to the time when you set up business for yourself, in 1865, please state what kind of leather you began to manufacture.

Ans. When I first started business for myself, in 1865, I began the manufacture of lace-leather similar to that which had been made at James Davis's—salt and alum leather; also the tawed leather.

Int. 35. Please state briefly the methods employed by you
64 in preparing the leather referred to in your last answer at the time you began, in 1865.

Ans. The method employed in preparing the first-named leather referred to was to subject it to a bath of salt and alum. After it was struck through it was taken out and went through the ordinary process of currying. The method of producing the second article of leather spoken of was to subject it to a weak bath of salt and alum and sulphuric acid until it was tanned part way through, leaving a raw internal stratum. After the hides were removed from the bath they were partly dried, after which they were subjected to the stuffing and fulling process. This being completed they were finished by the ordinary currying methods.

Int. 36. Whether or not in the preparation of the last-mentioned leather the amount of fulling and stuffing required to properly prepare the leather for use for lace-leather was dependent upon the extent to which the leather was affected or acted upon by the chemicals, and whether, in practice, this varied in different cases.

Ans. The greater or less amount of milling—that is, fulling—required depended upon the extent to which the hides had been subjected to the chemical bath. The more they were impregnated by the chemicals the less fulling they required; the less they were impregnated by the chemicals the more fulling they required. The degree of impregnation by the chemicals was at some times greater than others. At times the hides were very slightly subjected to the action of the chemicals. This necessitated a greater amount of milling than when the hides were more thoroughly impregnated by the chemicals.

Int. 37. Explain what you mean by "milling."

Ans. What I mean by milling or fulling is any kind of mechanical action which softens the hide and forces the grease into the leather.

Int. 38. Please state whether the statements which you have made in reference to the lace-leather made by you in 1865 in your own establishment and as to the method employed and the results of

that method apply equally to the tawed lace-leather manufactured at Davis's in 1853.

Ans. They do.

65 Int. 39. Please state whether you continued from 1865 on to manufacture tawed lace-leather by the method which you have described of tanning more or less of the surface of the hide by chemicals and then curing the remainder, fulling and stuffing it with grease; and, if so, how long did you so continue?

Ans. I continued from that time to the present.

Int. 40. In the manufacture of such lace-leather did you ascertain whether the character and quality of the leather as to strength, durability, etc., varied in any way according to whether it was more or less acted upon by the chemicals; and, if yea, what did you find to be the fact?

Ans. My experience in the manufacture of lace-leather taught me that the more it was impregnated with tanning materials the less strong and less durable it was.

Int. 41. Please state about when you learned the fact stated in your last answer, and whether you made any practical use of such knowledge.

Ans. I ascertained that fact about the time I began to taw leather, some time about 1865. As soon as I discovered it I began to make practical use of it by leaving the leather as raw as I possibly could, and soften it with the facilities that I was possessed of at that time.

(Adjourned.)

WEDNESDAY, *April* 6, 1887.

Int. 42. You say that when you learned by experience, about the time you began to make tawed lace-leather, in 1865, that the more it was impregnated with the chemicals the less strong and durable it was, you put that knowledge to practical use by leaving the leather as raw as you could, and soften it with the facilities that you then had. Please state what facilities for softening the leather you had at that time.

Ans. The facilities that I had at that time were the hand-pin block and hand board.

Int. 43. When you found that the less the hide was affected by the chemicals the stronger and more durable it was, did that teach you anything as to the advisability of omitting the use of chemicals altogether; and, if so, what?

66 Ans. After realizing that fact it taught me the necessity of providing some mechanical means that would entirely soften the hide in its raw state, because I realized that it would give me a better product to soften the leather in that way and entirely abandon the use of all tanning materials.

Int. 44. Did you abandon the use of chemicals at once; and, if not, why not?

Ans. I did not abandon the use of chemicals at once, for the reason that I had not the mechanical means to soften the hides.

Int. 45. Was there any other reason why you did not immediately proceed to make the leather without the use of chemicals except that

you did not have suitable machinery to soften a hide that was entirely raw?

Ans. There was no other reason.

Int. 46. What did you then proceed to do?

Ans. I proceeded to make some suitable machine to full the hides.

Int. 47. Please state briefly what you did in the way of getting some suitable machinery to full the hide.

Ans. I then designed and built what is now known in the art as a "power-pin block." After using this a short length of time I discovered that it would not fully answer the purpose I required it for, but still kept it in use till I could provide myself with something better. The next machine I constructed was one with double-fluted rollers. This did not work satisfactorily. I then constructed another machine, after a trip-hammer style. This worked comparatively well, but not entirely satisfactory. I then designed another machine, consisting of a large drum with pins at various intervals on the inside, projecting three or four inches. This, in connection with the power-pin block, made a comparatively fair article of pure rawhide leather, yet not entirely satisfactory, for the reason that it was not as economical as I required it. I then designed a machine which I called a boarding and breaking machine, which I have improved from time to time, up to the present, which works very satisfactorily.

Int. 48. When you finally succeeded in getting suitable machinery for fulling the hide, did you proceed to make pure rawhide
67 leather—that is, leather not at all subjected to the action of chemicals?

Ans. I did.

Int. 49. When you began to make pure rawhide leather did the process or method employed differ at all from that employed upon the raw portion of the tawed lace-leather which you had previously made?

Ans. It did not. The only difference was in the quality and perfection of the machine for doing the milling.

Int. 50. Have you read the deposition of Mr. Herman Royer in this case?

Ans. Yes, sir.

Int. 51. Mr. Royer admits in his answer to Int. 7 that when he commenced making experiments in 1867 it was well known that rawhide could be made soft and pliable by mechanical action, and there is practically the same admission in the specification of the patent No. 149,954 in suit. Please state whether or not it was also well known at that time that rawhide could be made soft and pliable not only by mechanical action but also by working or fulling grease into the hide at the same time.

Ans. It was well known at that time that rawhide could be made soft by mechanical action; also that it could be made soft and pliable by fulling or milling grease into it by mechanical action.

Int. 52. What is the effect of grease, such as tallow and oil, upon the hide when thus fulled into rawhide by mechanical action?

Ans. It softens and cures the hide.

Int. 53. Explain a little more fully what you mean by "curing" the hide?

Ans. I mean putting it in a good state of preservation.

Int. 54. Mr. Royer in his answer to Int. 7 further states that at the time he commenced his experiments, in 1867, soft, pliable rawhide was not an article of commerce nor in common use. What have you to say as to this?

Ans. It might not, in the knowledge of Mr. Royer, have been in common use, but it was practically in common use and was an article of commerce.

68 Int. 55. Mr. Royer gives as the reason why it was not in common use that rawhide made soft by mechanical action would return to a hard condition when laid away, and that in damp places it would mould and decay. Whatever may be the fact in these respects as to rawhide made soft by mechanical action alone, please state what was the fact as to rawhide made soft by mechanical action and by having grease fulled into it.

Ans. You take a rawhide softened by a mechanical process which had been prepared by the sweating method and it would have a tendency to become hard, mould, and decay, for the reason that the fatty matter by the process of sweating had not been removed from the hide. Consequently, it would retain more or less of the salt which had been used in the curing of the hide, and thereby cause the leather to draw moisture from the atmosphere, which would have a natural tendency to make it mould and decay unless some material similar to what was used on Russia leather was used to prevent it. This would not be the case with a hide that had been unhaired by the liming method, for the reason that the lime had killed the fatty matter, thereby allowing all the salty substance that had been used in the curing of the hide to be soaked out and worked out.

Int. 56. Mr. Royer also says that rawhide made soft by mechanical action would be eaten by rats, mice, and vermin. What is the fact as to this in the case of rawhide which has been unhaired by the liming process?

Ans. Rats and mice and vermin will not prey upon a rawhide that has been unhaired by the liming process for the reason that the very thing the rats desire has been removed from the hide, to wit, the fatty matter.

Int. 57. Mr. Royer gives it to be understood that he was the originator, or, as he states it, the creator, of "fulled rawhide," basing his claim to this, as I understand, upon what he did, beginning in 1867. What have you to say as to this and as to the novelty of fulled rawhide at that date?

Ans. Fulled rawhide was well known and in common use prior to 1867.

Int. 58. In answer to Int. 8 Mr. Royer gives it to be understood that he encountered great difficulties and was obliged to experiment for a long time before he succeeded in producing fulled rawhide. Would one familiar with the state of the art as known in 1867 have had any difficulty in producing fulled rawhide

69

except such as may have resulted from the want of suitable or economical machinery?

Ans. It is very evident from Mr. Royer's testimony that he was very little acquainted with the manufacture of leather, and it was not to be expected, owing to his ignorance of the art, but what he would meet with great trouble and difficulty. If he had been a thoroughly practical man he would have readily discovered where the difficulty was. A person skilled in the art would have put his hides at once in a suitable condition to work. Mr. Royer's ignorance did not admit of his doing this, but the great difficulty was in the imperfection of the machine for doing the milling. A practical man would have had no difficulty in producing a good article of stock immediately if the machine used for the purpose had been perfect.

Int. 59. When asked to state the nature of his experiments Mr. Royer, in answer to Int. 9, appears to refer chiefly to experiments which he tried to ascertain the proper degree of moisture of the hides to enable them to be properly worked in the fulling machine. State whether or not a man familiar with the art as known in 1867 would have experienced any difficulty in this direction.

Ans. That is a further exhibition of Mr. Royer's ignorance of the art. If he had been a practical man, skilled in the art, he would have known by common experience the degree of moisture the hides required to be in in order to successfully full them.

Int. 60. State whether or not the proper degree of moisture for a hide, to enable it to be properly fulled, was known to you prior to 1867 and whether you had any difficulty in this direction when you began the manufacture of pure rawhide leather.

Ans. It was, and I had no such difficulty.

Int. 61. Mr. Royer, in further answer to Int. 9, states that he many times worked hides in this machine while trying his best with the lights then before him, and the hides would come out of the machine overheated and injured by the mechanical action in some places, while there would still be raw, hard spots in other places in the same hide. State whether, as you understand it, the difficulties referred to resulted from the imperfect character of the machine or from what.

70 Ans. I can readily believe what Mr. Royer says, from my experience in the business, to be true. The difficulties contended with these were of a twofold nature; one, the imperfection of the machine; the other, the inability of the process or method by which the hides were unhaired to produce an article that would readily submit itself to the action of the fulling machine. A hide that is unhaired by the sweating process retains all the fatty matter, the gum, and other foreign substances which required to be removed in order to make a good product and which cannot be removed by that method. Consequently, the hides are exceedingly hard, rigid, and unyielding, which makes them damp very ununiformly, consequently makes them soften ununiformly and exceedingly hard when put into the fulling mill for that purpose, and unless the fulling mill is of the most improved character they will come out over-

heated by excessive friction, as Mr. Royer has set forth. Not so with a limed hide.

Int. 62. You say, "not so with a limed hide." Please state why this is so; and, if there are any differences resulting from unhairing a hide by the two different processes—of sweating and liming—to which you have referred, state fully what those differences are.

Ans. The liming method distends the fibre of the hide, or, in other words, expands and plumps it. It also destroys the fatty matter that the hide naturally contains and neutralizes the deleterious effects of any other foreign substance that the hide contains—such as scud and scurf—and at the same time puts the hide in a condition to be thoroughly worked. It also prevents the hide from again agglutinating, thereby leaving it in a good condition to be softened when it comes to the action of the fulling mill. There is a difference between the process of removing the hair by the method of sweating and by the method of liming. Sweating is a decomposing and rotting process; and to the extent that this process is carried on is the hair removed. As this process has no tendency to plump or expand the hide, it follows that a certain amount of rotting or decomposition must take place before the removal of the hair can be accomplished. Oftentimes in sweating hides, unless the greatest of care is taken, they are damaged to a great extent, which causes a great loss in product. The sweating process
71 does not destroy the fatty matter which the hide naturally contains, neither does it leave the hide in a condition to have the deleterious substances worked out, but rather has a tendency to form a kind of what might be called "cement," composed of scud, fat, and other substances that hides naturally contain, and, when the hide becomes dry, forms a sort of hard, shelly substance in the hide, something like glue, that is insoluble in water and will not yield uniformly to the subsequent dampening operation when required.

Int. 63. Mr. Royer, in his answer to Int. 14, compares the process used by you with his process, and states that when your hides have been drenched for the purpose of removing the lime and then dried they are in precisely the same condition as hides would be which had been unhaired by sweating and then dried. Please state whether this is the fact.

Ans. That is an erroneous idea of Mr. Royer's and a further exhibition of his ignorance of the art. They are in no way similar, further than that the hair has been removed from both. The sweated hide has gone through a certain amount of decomposition. Not so with the limed hide. The sweated hide contains all the fatty matter, also other deleterious substances. Not so with the limed hide. The fibres of the sweated hide have not been plumped and expanded so as to leave the hide in a condition to have all the deleterious substances worked out of it, or to prevent the hide from agglutinating, thereby greatly facilitating the operation of fulling when subjected to the fulling mill. In the limed hide the fibres have been expanded, the fatty matter has been destroyed, the effect of the other deleterious substances has been neutralized, and the hide

left in a condition for all the impurities to be worked out. In this case you have nothing left but pure fibre and gluten, which is necessary to make a perfect product, one that will be soft, pliable, and mellow and at the same time stand a great tensile strain.

Int. 64. To make clear the differences that you have referred to please describe briefly the two methods of unhairing a hide by sweating and liming respectively.

Ans. The sweating method consists of hanging the hides in what is called a "sweat-house." They are there closely confined, and a greater or less temperature is kept up in the sweat-house.
72 This creates a sort of fermentation; the hides begin to decompose and rot. Sometimes the decomposition is very irregular, causing the hides to rot through in the thinner parts while the decomposition has not sufficiently taken place on the thicker parts of the hide to admit of the hair being removed. When the hides are sufficiently decomposed to admit of the hair being removed they are taken out, and are then ready for the next step.

In the method of liming the hides are thoroughly soaked in clean water, after which they are what is termed "fleshed." This fleshing is for the purpose of removing the meat and all the fatty substance from the outside of the hide. After fleshing they are again soaked and thoroughly washed. They are then subjected to a solution or bath of lime and handled there from time to time, and the solution is strengthened as occasion may require, not simply until the hair is ready to come off, but until all the fatty matter contained in the hide has been destroyed by the action of the lime. The hides are then taken out of the lime vat and subjected to a milling operation which frees the hide from the hair, scud, and scurf and a certain quantity of the lime. The hides are then green-shaved and subjected to what we term a "drench," for the purpose of working out all traces of lime and other foreign substances, which, if left in, would injure the production of a perfect product. In case of necessity, if there should be any impurities in the drench used to destroy the lime, the hides would be subjected to what we call in the art a "sour," consisting of a weak solution of sulphuric acid and water. If in dog-day weather or under other circumstances drying is difficult, to avoid all fear of decomposition the hides may be subjected to a weak bath of carbolic acid and water and then dried.

Int. 65. You have referred to several steps in the liming process employed after the hide is removed from the lime vat. What is the general purpose of these several succeeding steps?

Ans. The general purpose is to purify the hide and put it in as perfect a condition as possible for the action of the fulling mill.

Int. 66. Do they have anything to do with removing the lime from the hide?

Ans. What I mean by "purifying" is to purge the hide of all its impurities, so that we shall have nothing left but pure fibre
73 and gluten; all traces of lime and other deleterious substances are removed.

Int. 67. By what process do you remove the hair from the hides from which you make your rawhide leather?

Ans. By the liming process.

Int. 68. And how does the process employed by you compare with the liming process which you have above described?

Ans. It is the same.

Int. 69. Have you ever employed the sweating process to remove the hair in the manufacture of any of the leather complained of in this suit?

Ans. Only in an experimental way.

Int. 70. Explain what you mean by that, and state what were the results of your experiments.

Ans. To test its merits in comparison with liming and its adaptability to the product desired to be produced. My experience with the sweating method was invariably unsatisfactory. It is a treacherous method and not all adapted to the class of stock we are obliged to use in the production of our leather. It is so treacherous that it was seldom we got a perfect hide out of the sweat-room, most all coming out more or less damaged, which caused considerable loss. Not only that: the dirty, slimy condition in which the method left the hides made it very difficult to work through all the subsequent operations; also left the hide in such a condition that when it became dry it had a sort of hard, shelly substance on the surface, which made it difficult to moisten when subjected to the water and very difficult to mill when brought to the action of the fulling mill. It is a method that cannot be successfully prastised in our variable climate.

Int. 71. Did you ever adopt the sweating method in the manufacture, practically, of this class of leather for the market?

Ans. No, sir.

(Adjourned.)

THURSDAY, *April* 7, 1887.

Int. 72. I observe in reading over your answer to Int. 64, wherein you describe the two methods of unhairing a hide by liming
74 and sweating, respectively, that you continued the description of the liming process up to the time when the hide was dried, but did not do this, as I understand, in the case of the sweating process. Will you please complete the description of the sweating process from where you left it up to the time the hide is dried, as you did in the liming process?

Ans. I will do so. If I remember right, I left the description of the sweating process at that stage where the hair was ready to be removed. After the hair was removed the hides were worked out, freeing them as much as possible from loose flesh and what other substance was possible to be worked out with the hide in that state. They were then hung up and dried. They yet contained all the fatty matter, a great part of the scud, and the albumen which, while the operation of drying is going on, forms itself into a cement, as before spoken of, which is insoluble in water, and makes the hide very difficult to soften when brought to the milling or fulling operation.

It is impossible to work out all these deleterious substances from a sweated hide, for the reason that there is no chemical change taken

place; neither has the hide been expanded nor the fatty matter destroyed nor the albumen dissolved. In fact, the hide by the sweating process cannot be got in a condition to have the impurities and deleterious substances worked out of it.

Int. 73. Mr. Royer, in further answer to Int. 14, in effect states that the sweating process and the liming process (including the drench) are well-known equivalents of each other, and have been such for more than twenty years. What have you to say as to this?

Ans. They are equivalents simply so far as agents employed for the removal of the hair, but no further. In the manufacture of rawhide leather there is a certain degree of liming which is required. It is necessary to reach this particular degree in order to make a perfect or a good and desirable product. It is also desirable that it should not be carried too far. If this were the case it would impair the quality of the product. To lime as an ordinary tanner would lime for tan-leather purposes would not answer the purpose for rawhide leather. We use the liming method for other purposes than simply removing the hair, as is the case with a bark-leather
75 tanner. We use the lime, or the lime is used, in our method for the purpose of expanding the hide, distending the fibre, destroying the fatty matter, dissolving the albumen that lies at the root of the hair, and leaving the hide in a condition to be purged by working out all its impurities, so that when it is in the dried state we have nothing left but pure fibre and gelatine, which during the subsequent operations will not agglutinate, and is in a suitable condition for the action of the fulling mill.

Int. 74. I infer from your last answer that there is a difference in the purpose and effect of the liming process in the case of a hide which is to be converted into tanned leather from its use upon a hide which is to be converted into pure rawhide leather. Is that what you mean? And, if so, please explain a little more clearly what the differences are and state the reasons.

Ans. There is a difference. All that is required in liming a hide for tan leather is simply to lime it just sufficient to remove the hair. It is not necessary to carry the process any further for tan leather, for the reason that when the hides are subjected to the liquor the acid, which all vegetable tannins contain, neutralizes the deleterious effects of any of the impurities that may have been left in the hide, such as lime, scud, fat, or albumen, after the process of drenching. For pure rawhide leather it is different. The hides must be limed more, for the reason that we desire to expand the fibre; also to destroy the fatty matter, dissolve the albumen, and leave the hide in a condition to have its impurities all worked out, as there is no agent, as in the bark-tanning process, to neutralize the deleterious effects of these substances if left in the hide. As said before, in order to make a good and substantial product of rawhide leather we must have nothing but pure fibre and gelatine, when the hides are ready for the subsequent operations after drying.

Int. 75. You say, in answer to Int. 73, that the sweating and liming processes are equivalent only so far as they are both means for re-

moving the hair, but no further. Please point out a little more fully why they are not equivalents, except in the general sense referred to.

Ans. For the reason that the methods are not alike any further than in the removal of the hair. In the liming process there
76 is a chemical change takes place. In the sweating process there is no chemical change takes place. The results in the subsequent operations are different; therefore they are not equivalent further than the removal of the hair. The liming will do what the sweating will not do, and goes a great deal further in its operation. The chemical change that takes place is the destruction of the fatty matter in the hide, the dissolving of the albumen at the root of the hair, the expansion of the fibre, and the prevention of the hide agglutinating in the subsequent steps.

Int. 76. From the cross-examination of Mr. Royer I gather that before he adopted the sweating process he tried the liming process for removing the hair, but that he could not make a good fulled rawhide when he used lime, and that consequently he gave up the liming method and adopted the sweating method for removing the hair in preparing the rawhide leather by his process. If I am correct, what have you to say as to Mr. Royer's inability to use the liming process successfully?

Ans. The reason that Mr. Royer made a failure in the liming process was because he simply limed to remove the hair. If he had carried the process of liming still further and destroyed the fatty matter that was in the hide, dissolved the albumen that lay at the root of the hair, and by so doing leave the hide in a condition to have been purged of its impurities in the subsequent operations, he would have succeeded, but he was a novice in the business. He didn't know what was required. He simply limed for the removal of the hair and, consequently, made a failure of the method.

Int. 77. Do you mean that he tried the liming process in the way in which it was commonly known and used in the tanned-leather art—that is, simply for removing the hair—and in which sense alone you have said the liming process can be considered an equivalent for the sweating?

Ans. I mean to say that, from what I gather from Mr. Royer's testimony, the only object he had in view was simply to get the hair off the hide, regardless of destroying the fatty matter, distending the fibre, dissolving the albumen, or leaving the hide in a condition that it would not again agglutinate. Bark tanners simply use the liming process to get the hair off. I infer that that
77 was Royer's only object in liming, the same as it was in sweating—just simply to remove the hair.

Int. 78. What have you to say as to the practicability of preparing rawhide leather for belting or for lacing by a process which involves sweating as one of its steps, and how would the rawhide leather produced by such a process compare with leather produced by a process the same in all respects, except that the liming process, as employed by you, was made use of instead of the sweating process?

Ans. Taking that in connection with this case in reference to belting, an article of leather produced by either the sweating or liming process and subjected to the subsequent operations, such as are used in the production of this leather, is worthless for belting purposes, or comparatively so. The fulled rawhide leather—no matter whether it is made by sweating or liming—is not adapted for belting. I know of none of it being used in this section of the country. I know of none of it being on sale. All that the fulled rawhide leather is adapted for is for lace-leather, picker leather, and strapping about cotton and woollen machinery. Leather produced in that way is soft and pliable and will stand a great tensile strain; yet it is not adapted for belting because it has little driving power. The liming process, when properly manipulated by an experienced person, produces a much better article of leather than can be produced by the sweating process, for the reason that it is equally good in standing a tensile strain and because it is softer and more supple, partaking more of a buckskin nature; will not grow hard after it has been used to lace belts, neither will it be so destructive of the belt as the more rigid, harsh leather manufactured by the sweating process.

Int. 79. I show you a copy of the Royer patent, No. 149,954. Please state whether you have read the same and whether you understand it and the process or method of preparing rawhide therein described.

Ans. I have read the same and I think I understand it.

Int. 80. Please state whether, from your knowl*dege* and experience in the art, you consider the process described in said patent adequate to produce a serviceable and durable article of
78 rawhide leather, and especially whether said process is adequate to prevent the decomposition of the leather, and give your reasons.

Ans. My experience is that a sweated hide, or, in other words, a hide prepared by the sweating method, will not produce as good an article as that produced by the liming method, for the reason that by the sweating method the deleterious substances cannot be removed from the hide; consequently you can only get an imperfect product. If by the sweating process the hides had not been thoroughly purged of the salt that was used to cure the hide, the leather would have a tendency to draw moisture. The consequence would be, if the leather did draw moisture, it would have a tendency to mould and decompose, unless some substance such as paraffine or tar or something of that nature was put into the leather to prevent it. Furthermore, leather made by the sweating process, which contains the fatty matter, would, when piled away and kept for a great length of time, have a tendency to heat like a piece of oily cotton waste, and thereby become damaged.

Int. 81. You have stated that the liming process as used by you in the manufacture of rawhide leather differs from the liming process as used in the manufacture of tanned leather. State whether the liming process as used by you was an old and known process or

whether it was discovered by you; and, if the latter, state when you discovered it.

Ans. The liming process as used by me was a new process, to the best of my knowledge, when discovered by me about the latter part of 1874 or 1875. Up to that time I had limed in the ordinary way as for tanned leather, but I found at that time that there was something else required besides the removal of the hair. I discovered from experience that a hide which was limed only sufficiently to remove the hair was not fully adapted to the purpose I required it. I discovered that the process should be carried still further; so much so as to kill the fatty matter which the hide contained and dissolve the albumen. I found after the accomplishment of this I obtained a much better product than by liming simply for the removal of the hair.

Int. 82. To go back a moment to the leather made at Davis's in 1853 and along there, what were the ingredients of the stuffing used upon the leather manufactured there, which you have referred to in the early part of your deposition? I refer to the tawed leather, in which the raw portion was cured by grease, as you stated.

79

Ans. If I remember correctly, the stuffing compound for the tawed leather was composed of tallow and oil.

Int. 83. While you were at Davis's was it customary there to stuff other kinds of leather besides the tawed leather referred to?

Ans. It was.

Int. 84. State what other kinds of leather were stuffed there and what ingredients were used for the stuffing.

Ans. Belt leather. The stuffing compound for that leather was usually composed of tallow, fish oil (or, in other words, straits oil or cod oil), and rosin. Sometimes they used to use different kinds of fish oil, but the oils were substantially the same. I would add also that occasionally neat's-foot oil was used. The reason of the change in the oil from one kind to another is because some kinds of oil are better adapted to certain tannages of leather and are sometimes more economical in price.

Int. 85. Coming down to the time when you started business for yourself in 1865, please state what kind of stuffing you used.

Ans. From 1865 to 1866 we used to use the ordinary stuffing, composed of the various ingredients mentioned before. About the middle of 1866 we changed and began to use a variety of stuffing compounds which was composed of a variety of ingredients, such as tallow, straits oil, cod oil, rosin, glycerine, paraffine oil, tallow oil, and sometimes rosin oil and bees-wax. These were not all used in one compound, but several were mixed together as occasion required. We also used at the period last mentioned castor oil, neat's-foot oil, and what is commonly known in the trade as rejected medicine oil.

Int. 86. How early did you know of the use of rosin as an ingredient of a stuffing compound used on leather?

Ans. As early as the latter part of the year 1852.

Int. 87. How early did you know of the use of paraffine or

paraffine oil as an ingredient of a stuffing compound used on leather?

Ans. As early as June, 1866.

80 Int. 88. What was the object of the use of paraffine or paraffine oil in such stuffing compound? What office did it perform?

Ans. Owing to its great penetrating quality it was used as a vehicle to help to carry in the other stuffing and also preserve the leather. It was also used to prevent the leather from what is called "frying out." It also prevents leather from moulding or mildewing in case of dampness.

Int. 89. How about rats and mice? Does paraffine have any effect in that direction?

Ans. Rats, mice, vermin of any kind, and bugs will not prey upon leather impregnated with paraffine oil.

Int. 90. State whether or not it was common in the art, prior to 1867, to employ various kinds of stuffing compounds, composed of varying ingredients, upon various kinds of leather, including tanned leather, partially tanned leather, and entirely untanned leather, according as the judgment of the manufacturer should direct.

Ans. It was a common practice in the art to use various compounds of stuffing in the production of various kinds of leather, composed of the various ingredients mentioned, as required.

Int. 91. Prior to 1867 or 1868, did you know anything about the use of tar on leather or as to the office which it performed or the effects which it produced on leather?

Ans. In the year 1854, while in California working in the mines, I got a receipt from a man for what he called "dubbing," which was used for the softening and preservation of boots. This dubbing was composed of tallow, bees-wax, and tar. It was made into a compound by boiling, and rubbed well into the boots while it was in a warm state; it preserved the leather and rendered the boots comparatively water-proof. The next I knew about tar on leather was immediately after the breaking out of the war. I went into the cavalry at that time. Prior to joining the regiment I bought a pair of long cavalry boots; the leather from which the boots were made had a peculiar odor. The party I got the boots of told me they were made of Russia leather. Being a currier and dresser of leather, and not having seen any leather before which had this peculiar odor,

I was curious to find out how it was obtained. I looked up

81 the method of the manufacture of Russia leather, and I found that this odor was caused by the leather being impregnated with birch tar.

(Objected to as incompetent, irrelevant, and immaterial.)

Int. 92. You say that in 1854 you obtained a receipt for "dubbing" for boots, composed of tallow, tar, and bees-wax. Did you use any of such dubbing? And, if so, state the facts.

Ans. I made it and used it during the time I was in California, and for some time after that, and found it to be a very desirable article for that purpose. I afterwards used it in the navy, and I am

strongly impressed that I used it in the army during the years 1861–1863.

Int. 93. Did the use of this dubbing—tallow, tar, and bees-wax—which you have referred to, teach you anything as to the effect of the use of tar on leather; and, if so, what?

Ans. It taught me that it was a very good compound to use on boots; also that it kept the leather soft and pliable, preserved it, and enabled it to shed water.

Int. 94. Do you know whether this dubbing of tallow, tar, and bees-wax was used upon leather by others than yourself prior to 1867 or 1868, and whether or not it was commonly known prior to that time that the tar was a good thing to use on leather and that its effects were as you have stated?

Ans. To what extent it was used I couldn't say, further than by the parties who were immediately associated with me, such as the party I obtained the receipt from, my partners who were associated with me in the mining business, my shipmates whom I was associated with in the navy, and others whom I gave the receipt to in the army.

Int. 95. Can you give us an idea how many other parties there were as referred to by you in your last answer?

Ans. I couldn't give any accurate idea as regards that point. I should think as a rough estimate, as sort of guess-work, they might be seventy-five or one hundred. While in California I had five different partners. They all used it. Of course, the man whom I obtained the receipt from and his partners used it. The ship on which I was employed in the navy had a crew of one hundred and eighty all told, and the receipt was common amongst them. They could have all used it if they thought proper, but I don't know
82 accurately how many did use it. There was from seventy-five to one hundred men in the company I belonged to while in the army, and it was quite common there, but I couldn't say how many of them used it, but I know that a number did.

(Adjourned.)

THURSDAY, *April* 14, 1887.

Present: Thomas H. Livermore, Esq., of counsel for complainant; Wilmarth H. Thurston, Esq., of counsel for defendants.

Int. 96. You have referred, in certain of your previous answers, to the use by yourself and others of a "dubbing" for boots, composed of tallow, tar, and bees-wax, and that you used the same in California, and afterwards in the navy and while you were in the army. Please state, as nearly as you can, for how long a period you used such dubbing.

Ans. I used that during a period of nine or ten years.

Int. 97. You say that you used this dubbing while in the army. State what army you refer to and where you were during the time mentioned.

Ans. It was in the United States Army during the war of the re-

bellion. We were quartered part of the time at Hilton Head, South Carolina; part of the time in the State of Virginia.

Int. 98. You stated that your experience in the use of this dubbing taught you that it was a very good compound to use on boots; that it kept the leather soft and pliable and preserved it. Please state whether it taught you anything as to the penetrating character of tar or as to its utility as a vehicle; and, if so, what?

Ans. It taught me that it was a substance that had great penetrating qualities; also that it aided very materially to carry the other ingredients of a more solid nature into the leather.

Int. 99. Did you or not find such to be the case in your use of the dubbing referred to at the time mentioned?

Ans. I did.

Int. 100. You have stated in one of your previous answers that in the manufacture of what is known as Russia leather the leather is impregnated with birch tar. State when you learned this to be a fact.

(Last objection repeated.)

Ans. About 1861.

83 Int. 101. State whether or not, if you know, this birch tar, with which Russia leather is impregnated, is a wood tar, and how the use of such birch tar upon leather compares with the use of what is ordinarily known as wood tar, in the purposes and effects of such use.

(Same objection repeated.)

Ans. Birch tar is extracted from birch and is properly a wood tar. I should say that the one compares very favorably with the other, and that they were substantially designed for one and the same thing. The design in the use of the one and the other is to accomplish one and the same object.

Int. 102. Whether or not the use of the birch tar, as employed in the manufacture of Russia leather, accomplishes the same results and produces the same effects as the use of what is commonly known as wood tar in the manufacture, for instance, of rawhide leather?

(Same objection repeated.)

Ans. The functions of either kind of tar are the same on no matter what kind of leather they are used; no matter whether it is tanned leather, half tanned, or pure rawhide.

Int. 103. Whether or not it was commonly known in the leather art in this country prior to 1867 that in the manufacture of Russia leather the leather was impregnated with birch tar?

(Same objection repeated.)

Ans. It was.

Int. 104. You stated that when you were led to investigate in 1861 how Russia leather was made or how the peculiar odor which you observed was obtained you looked up the method of the manu-

facture of Russia leather and found that the leather was impregnated with birch tar. Where or how did you look it up?

(Same objection repeated.)

Ans. At that time I was the owner of a good-sized volume that treated of the various methods of manufacturing leather. I obtained the information from that volume in reference to the treatment of Russia leather.

Int. 105. Have you now in your possession the book referred to; and, if not, what became of it?

Ans. I have not. Our establishment was burned down in 1872, and that book was consumed in the fire.

84 (The last two answers are objected to so far as they tend to prove that the process described in the patent in suit was described in a prior printed publication on the ground that no such publication is set up in the answer and, not being specified by the witness, cannot be investigated.)

Int. 106. Do you remember the title of the book you referred to, or where or by whom it was published?

Ans. I do not remember the title of the book nor where nor by whom it was published, but I have an impression that a friend of mine has a similar book which may be procured.

Int. 107. Will you ascertain the fact, and, if possible, procure the book?

Ans. I will do so.

Int. 108. Referring to the deposition of Mr. Royer, I find that in his recross-examination Mr. Royer admits, as I understand, that Russia leather had been impregnated with birch tar prior to his (Royer's) alleged invention of the subject-matter of the patent in suit, and that the tar with which the leather was so impregnated prevented rats and vermin from attacking such leather. Do you or not agree with Mr. Royer in the statements?

Ans. I agree with Mr. Royer that the use of tar had been known before and that it would prevent any kind of vermin attacking whatever was impregnated with it.

Int. 109. You stated in a previous answer that the functions of tar were the same, no matter what kind of leather it was used on. State whether this is true of its penetrating quality and of its utility as a vehicle to carry other ingredients into the leather, as well as of its function of preventing rats and vermin from attacking the leather which is impregnated with it, and of its other functions, whatever they may be.

Ans. Tar, whenever used on leather of any description, has a great penetrating quality, and it always greatly assists to carry in the other ingredients which stuffing compounds are usually made from.

Int. 110. You have stated that you knew of the use of tallow and rosin as ingredients of stuffing compounds fulled into leather long prior to 1867. Please state upon what kinds of leather you

85 knew of the use of stuffing compounds containing tallow or rosin, or both, and for what purposes such ingredients were used.

Ans. I have known of the use of stuffing compounds to be used on leather since I first went into the business. I never saw any leather curried without tallow and various kinds of oil and grease. It is customary in making some kinds of stuffing compounds to use rosin in connection with the tallow, oils, and various other substances that are used in the production of leather, no matter what the leather is—whether it is entirely raw, partially tanned, or dead tanned—and these various ingredients, such as rosin, tallow, oil, tar, bees-wax, always perform the same function, on no matter what kind of leather they are used.

Int. 111. And was this true prior to 1867?

Ans. It was true prior to 1867.

Int. 112. You have stated in a previous answer that you knew of the use of paraffine or paraffine oil as an ingredient of a stuffing compound fulled into leather as early as June, 1866. When did you yourself commence to use it?

Ans. I commenced to use it about that time. It would be impossible for me to state the day or the month, but it was between the middle and latter part of 1866.

Int. 113. Upon what kind of leather did you use it at that time?

Ans. Both tanned and partially tanned leather.

Int. 114. By partially tanned leather do you mean the tawed leather previously mentioned by you?

Ans. I mean leather, strictly speaking—that is, part raw and part tanned. I include the tawed leather in the statement.

Int. 115. Whether or not you continued to use paraffine upon this tawed leather (by which I understand you mean leather tanned part way through by chemicals and the balance left pure rawhide)?

Ans. Yes.

Int. 116. You have stated in the first part of your deposition that from your experience in the manufacture of this class of leather you found that the less you tanned the leather by the chemicals the stronger and more durable it was, and that consequently you used to leave as much of it raw as you could soften properly with the machinery that you then had, and that subsequently, after
86 obtaining suitable machinery, you omitted the use of chemicals altogether and thus left it raw all the way through. State whether you continued to use paraffine as an ingredient of the stuffing upon the tawed leather up to the time you commenced to leave out the chemicals altogether, and whether or not you continued to use paraffine upon the pure rawhide leather which you then commenced to make.

Ans. I continued to use paraffine up to the time when I discontinued the use of the chemicals altogether and for a considerable time after I manufactured pure rawhide.

Int. 117. A copy of the letters patent granted to you for an improvement in the process of manufacturing rawhide leather was put in evidence by counsel for complainant in the course of your pre-

vious deposition. I find in examining that patent that it refers to paraffine as one of the ingredients of the stuffing compound. State whether the use of paraffine referred to in said patent is the same or different from the use of paraffine as referred to in your last answer.

Ans. It is the same.

Int. 118. I find that in the process described in your said patent the hides are treated with what is called a "slush," consisting of tallow, paraffine, and bees-wax. Please state what is meant by the term "slush," there used.

Ans. That means the same thing as the word "stuffing," as used by me in this deposition.

Int. 119. You say that you continued to use paraffine in the stuffing for a considerable time after you began to manufacture pure rawhide. Up to about what time did you so continue to use paraffine?

Ans. To the best of my knowledge, to about 1878. Perhaps it might have been later than that, but if it was it is not clear to my recollection. It might be that we continued to use paraffine up to 1881 or 1882.

Int. 120. Do I understand that at some time, the exact date of which you are not certain about, you discontinued the use of paraffine?

Ans. We used to change our stuffing compounds frequently. In extreme warm weather we would sometimes dispense with the use of paraffine altogether, as the tallow in extreme hot weather
87 is limp enough to carry the other ingredients into the leather of itself. We discontinued the use of paraffine entirely during the extreme warm days. It is frequently the case that the compounding of stuffing ingredients varies according to the temperature of the atmosphere. In extreme warm weather the tallow, which is the principal ingredient in all stuffings, will penetrate leather of itself without the assistance of any other ingredient to help to carry it in, but in extreme cold weather it requires a little assistance in the way of paraffine, oil, tar, or something of that nature to give it that limpness that is required to enable it to penetrate easily.

Int. 121. You say that it requires a little assistance in the way of paraffine, oil, tar, or something of that nature. State whether or not it was known in the leather art in this country prior to 1867 that each of the three substances named, to wit, paraffine, oil, and tar, would render the necessary assistance referred to, and whether each of them had been, prior to that time, used for that purpose.

Ans. It was well known and each and all of them had been used for that purpose prior to 1867.

Int. 122. Did you at any time substitute for the paraffine any other substance in the manufacture of your raw hide leather? And, if so, state what you so substituted and how you came to make the substitution.

Ans. I did at one time substitute tar for paraffine. I made the substitution for two reasons: the first was a matter of econ-

omy, the second was to get rid of the disagreeable odor of the paraffine.

Int. 123. You say one reason was a matter of economy. Explain a little more fully what you mean by that.

Ans. Tar is cheaper than paraffine.

Int. 124. Whether or not the purpose and effects of the use of tar and paraffine, respectively, as an ingredient of a stuffing compound fulled into leather are the same or different.

Ans. They are very good substitutes and equivalents when used in the manufacture of all kinds of leather. The purpose and effects are substantially the same.

Int. 125. About when was it that you made the substitution of tar for paraffine?

Ans. We did not give up the use of paraffine or adopt the
88 use of tar at any specific time. Sometimes we were working one thing and sometimes another for a little while, and it is not just exactly fresh to my mind at the present time when we entirely gave up the use of paraffine and went entirely on to the use of tar.

Int. 126. You say that tar and paraffine are very good substitutes and equivalents for each other, and that the purpose and effects are substantially the same. When did you first know this—that is, when did you first learn that tar would do the same work or produce the same results when used on leather as paraffine, or *vice versa?*

Ans. I became acquainted with the effects of paraffine after 1866. I knew the nature of the tar in 1854.

Int. 127. You say you became acquainted with the effects of paraffine after 1866. What do you mean by "after 1866"? Please state more definitely.

Ans. The idea that I wish to convey is that I became acquainted with it after the date I began to use it in 1866.

Int. 128. That still leaves it indefinite. The question is, how soon or how long after, or, in other words, when, was it that you so became acquainted with the effects of paraffine?

Ans. I believe that I have said before that I commenced the use of paraffine somewhere about the middle or latter part of 1866. Now, I can't tell to a minute nor a day, nor perhaps a month, when this thing first came to my mind, but it didn't take me long to learn the effects of the use of paraffine as an ingredient for a stuffing compound. I consider that I have fixed the time between the middle and latter part of 1866.

Int. 129. I show you a copy of the letters patent to Herman and Louis Royer, No. 77920, dated May 12, 1868, and also a copy of the letters patent to Herman Royer, No. 91772, dated June 22, 1869. I find in the first of said patents a statement that the hide operated upon by the machine described in that patent is then treated with oil and tallow in the usual way, and also a similar statement in the second patent referred to. Please state what, as a practical man, you understand to be meant by those statements. What was the

usual way of treating leather with tallow and oil at the dates of those patents?

Ans. The construction that I put upon this is that the
89 hides or leather is subjected, before or during the method of fulling, to a stuffing of oil and tallow applied in the usual way. By this method the leather is rendered very tough and the fibres or grain are not injured. The usual way was to subject them to oil and tallow for the purpose of stuffing the leather—that is, at the present time, and was, previous to the dates of these patents, an old and well known way of treating hides and leather.

(Copies of the patents referred to are put in evidence by counsel for the defendants, and the same are marked respectively "Defendants' Exhibit Royer 1868 Patent, J. H. S., Jr., sp'l ex'r," and "Defendants' Exhibit Royer 1869 Patent, J. H. S., Jr., sp'l ex'r.")

Int. 130. You say that the usual way was to subject the hides or leather to oil and tallow for the purpose of stuffing it. State whether or not the oil and tallow were worked into the leather; and, if so, how.

Ans. The oil and tallow was worked into the leather by the process of fulling.

Int. 131. Referring once more to the deposition of Mr. Royer, I find that he states on cross-examination that the chief or striking difference between the fulled raw hide made by him in 1867 and that made by him at a later period was that in the manufacture of the latter he used tar. Assuming that that was the only difference, state whether or not the addition of tar would in any way change or effect the process of manufacturing the leather, or "fulled rawhide," as Mr. Royer calls it.

Ans. The addition of the tar to the stuffing compound would in no way change the process of producing fulled rawhide. It is immaterial what kind of a stuffing compound you full into the leather. As fulled rawhide has a tendency to be soft and loose in the flanks and flabby part of the hide, it requires something of a solid kind of a nature, such as rosin, bees-wax, paraffine, wax, or something of that kind, to give them a solid marketable appearance. In order to get this bees-wax, rosin, or what other ingredient you use of that nature into a suitable condition to be put into the hide, it requires something of the nature of tar or paraffine to put it into that state which will render it suitable to go into the leather during the full-
ing, which naturally, from the friction caused by the fulling
90 operation, creates a high temperature. When the leather cools the rosin, bees-wax, which has been carried into the hide by the aid of either tar or paraffine and during the subsequent operations of currying, solidifies in the flabby parts of the hide and makes them more desirable than they would be without those solid ingredients before spoken of. This you may say, as far as filling up the leather is concerned, takes the place of ordinary tannin used in the preparation of tanned leather.

Int. 132. And assuming that the only difference in the treatment of rawhide described in the patent in suit and the treatment of raw-

hides described in the prior Royer patents above referred to consists in the addition of tar to the stuffing, state whether that constitutes any difference in the process of preparing the leather or fulled rawhide.

Ans. It constitutes no difference whatever in the process in the preparation of fulled rawhide. The only difference is in a combination of the ingredients employed in the stuffing.

Int. 133. Mr. Royer in his deposition, in answer to a question in redirect examination, states that the use of tar or its equivalent is absolutely essential in the manufacture of fulled rawhide. What have you to say as to this?

Ans. In reply to that I would say that tar is not absolutely essential to fulled rawhide. There is not one-tenth part of the fulled rawhide that is manufactured in the United States that has any tar in it or any equivalent for tar.

Int. 134. Mr. Royer in his deposition further states that one great object that he had in using tar was to prevent rats, etc., from eating the leather. State whether, in your use of tar, you have ever used it for that purpose; and, if not, explain why not.

Ans. We have never used tar for the manufacture of our leather for that purpose, for the reason that we don't require it. The reason we don't require it is because we lime our hides. This liming, conducting it in the manner we do, enables us to expel all the fatty matter from the hide. This fatty matter is what attracts the rats. When it is removed from the hide there is no attraction for rats.

Int. 135. Whether or not there is any difference in this respect between a limed hide and a sweated hide.

91 Ans. There is a difference in that respect between a limed hide and a sweated hide. The sweating method or process does not admit of the fatty matter being expelled from the hide; consequently in a sweated hide there is always an attraction for rats, so that a sweated hide requires tar or its equivalent to keep off the rats.

Int. 136. How does a limed rawhide compare with tanned leather in this respect?

Ans. They are similar; neither of them attract rats. Tar is needed in neither, therefore, to keep off rats.

(Adjourned.)

FRIDAY, *April* 15, 1887.

Int. 137. Referring to the question of the alleged equivalency of the liming and sweating methods for removing the hair from hides, state whether it was known at the date of the Royer patents in suit that the liming method could be employed for removing the hair from a hide which was to be converted into pure rawhide leather as distinguished from tanned leather; and, if not, explain why.

Ans. It was not known that the liming method could be used in the production of rawhide leather or of hides to be converted into pure rawhide leather. As an evidence of this, Royer didn't know how to do it; at least, we have every reason to believe from his testimony that he tried and did not succeed. Secondly, it was

not necessary, as all the intention of liming in the ordinary bark-tanning process was simply for the removal of the hair; whereas in the production of a perfect article of pure rawhide leather it is necessary that all the fatty matter in the hide should be destroyed; also that by the action of the lime the albumen that lies at the root of the hair should be dissolved, leaving the hide in a condition to be purged of all its impurities. In order to produce a perfect article of rawhide leather it is necessary to have all the impurities removed from the hide, because there is no agent to neutralize the deleterious effects of these ingredients in the subsequent process or parts of the process, as in tanned leather. All vegetable tannin contains a certain acid that neutralizes the effect of the fatty matter and the albumen and other foreign substances that may happen to be left in a hide when brought to the tan liquor. On this account the bark tanner simply limes for the removal of the hair.

92 Int. 138. Mr. Royer, in his deposition, in answer to Int. 14, says that the process of unhairing used by the defendants herein, as described by you, is a process that has long been familiar to tanners, giving the impression that it was so familiar prior to the date of his alleged invention, which forms the subject of the patent in suit. What have you to say as to this?

Ans. I would say that Mr. Royer is not correct. His own inability to make a success of the process is a sufficient proof, to my mind, that he knew nothing about it. The process of unhairing used by us was not known at that time.

Int. 139. Mr. Royer, in the same answer, further says that any tanner could use it (that is, the unhairing process used by you) by means of the common knowledge belonging to the tanning trade and without any invention. Assuming that he refers to the common knowledge existing at the date of his alleged invention, what have you to say as to his statement?

Ans. I have to say that that statement of Mr. Royer's is not a true statement, for the reason that a common tanner knew nothing about the liming of hides to be used in the production of pure rawhide leather. All he knew was simply to lime to remove the hair, which was all the knowledge required in tanned leather.

Int. 140. Referring in this connection to the specification of the Royer patent in suit, I call your attention to the statement therein, near the bottom of the first column, commencing as follows: "In order to more fully understand my mode of preparing hides I avoid the use of lime, acid, or alkali, etc.," and ask you what you understand oy this statement.

Ans. I infer from this statement, especially in regard to the lime, that Mr. Royer was under the impression at the time this specification was made that, as he says, lime was really injurious to the hide. Cousequently he avoided its use. Lime, contrary to what he sets forth, is not injurious to the hide, neither is the value of the product produced by its use deteriorated in value. If Mr. Royer had understood all the requirements of liming for the production of a pure rawhide leather he would not have made such statements;

but he seems to have taken it for granted that because he couldn't make a success of the liming method that it was injurious to
93 hides. He further says: "If the effects of the aforesaid substances are in some way neutralized, which must be a chemical one, the hide suffers again in this process." That is an erroneous statement, and ought not to be made by any practical man, or, in other words, any man who pretends to be practical in the production of pure rawhide leather. It requires no chemical change to take place in the hide, as he sets forth, after the hide has been limed to purge it of its impurities. It has already been left in the condition by the liming process for these impurities to be worked out without any further chemical change.

Int. 141. Do you gather from the portion of the Royer patent in suit that you have just referred to that Mr. Royer, at the date of that patent, did or did not understand how to use the liming method for the removal of the hair from a hide in the preparation of rawhide leather?

Ans. I infer from the reading of that specification that Mr. Royer knew nothing about the use of lime in the preparation of hides intended for pure rawhide leather, further than simply as an agent for the removal of the hair.

Int. 142. Do you find anything in the specification of the Royer patent that indicates that Royer knew anything about the use of lime in the preparation of rawhide even as an agent for the removal of the hair?

Ans. I do. I think a part of it implies that he knew about lime as an agent for the removal of the hair, and that only; for he says, "In order to more fully understand my mode of preparing hides, I avoid the use of lime." I infer that a man would not make such a statement as that unless he knew something about lime. I further feel confident that if he had understood the proper use of lime he would never have said that he avoided the use of it, for the reason that a limed hide, when properly manipulated, makes a better product of pure rawhide than can be made by any other known method in use at the present day.

Int. 143. You have stated that you gather from Mr. Royer's deposition that he tried the liming method, but did not succeed with it, and gave it up. State whether or not this corroborates your understanding of that portion of the Royer patent above referred to.
94 Ans. Mr. Royer says, in so many words, that he tried the liming method and gave it up. That does corroborate, in my opinion, that part of the Royer patent I referred to.

Int. 144. Please now state what you understand to be the method or process of treating rawhide described in the specification of the Royer patent in suit. Please refer to a copy of the patent, which I now hand you, and in answering the question point out the several steps which, as you understand, go to make up the said method or process.

Ans. I understand that the method or process set forth in the specification of the patent consists of the several steps enumerated therein. The first step is the removal of the hair by sweating; the

second step is to dry the hides perfectly hard; the next step is to insert them in water ten or fifteen minutes; the next step is to full the hides. They are then taken out of the fulling mill and smeared over with a stuffing compound composed of a mixture of twenty parts tallow, two parts wood tar, and one part rosin, which is applied to them in a warm, liquid state. They are again subjected to the fulling mill and remain there until soft, when they are again taken from the crib and moistened four or five times during the day with water. The next day the leather is stretched and cut into pieces suitable for belting.

Int. 145. In your previous deposition in this case you described the process of preparing rawhide employed by the defendants. Will you please now compare the process of the defendants as there described with the process described in the Royer patent in suit and state whether they are alike or different, and point out wherein they are alike or different, as you may find upon making the comparison called for?

Ans. There is no similarity in the processes or methods further than they are both subjected to a fulling operation. They are entirely different in all the steps of manipulation, with that one exception. The products produced are not alike. They are both used for the purpose of lacing, but there is just as much difference in the quality and superiority of one over the other as there is between an old, common, slide-valve engine and one of the latest improved cut-offs. Our process, or the process and method of the
95 defendants, first consists of a thorough soaking and fleshing of the hides. They are then subjected to a bath of lime, and then handled continually until the step of liming is completed, after which they are removed from the lime and unhaired. This liming destroys the fatty matter contained in the hide, and also dissolves the albumen at the roots of the hair, leaving the hides to be purged by the subsequent operations. After the hair has been removed the hides are thoroughly washed, trimmed, green-shaved, when they are ready for the next step, which consists of what is called a "drench." They are wheeled in this drench for a greater or less time, as occasion may require. This drench can be composed of any materials thought best to be employed, water at a temperature of ninety degrees being as good as anything. The hides are then passed to the tanner's beam, cleanly worked out, again washed, and hung up to dry. When they are nine-tenths dry they are ready for the fulling operation, but in case of dog-day weather, when the drying is very bad and the facilities for drying very poor, the hides may be subjected, previous to drying, to a weak bath of carbolic acid. This would arrest any tendency to decomposition liable to occur at such seasons. As I said before, when the hides are nine-tenths dry they are taken down, smeared over with stuffing compound composed of tallow, tar, rosin, and bees-wax, and, if in exceeding cold weather, a little oil will be used—neat's-foot oil—in the production of the stuffing. If it is not convenient to take the hides at this nine-tenths dry state and subject them to the action of the fulling mill they are allowed to dry out; but before coming to the action

of the fulling mill they must be moistened to that nine-tenths dry condition. They are then smeared with a stuffing compound, composed as before stated, in a cold, pasty condition. They are then put into the fulling mill and fulled until about three-fourths soft, after which they are removed and stretched on a stretching machine, particularly designed for that purpose. They are again subjected to the fulling mill; but previous to this, if occasion requires, they are given a little more of the stuffing compound. The fulling operation being completed, the hides are again removed from the crib and again subjected to the stretching machine, after which they are split down the back into sides. They are then ready for the
96 subsequent operations of currying, which can be completed the same day, when the stock is ready for market.

The differences in the two processes or methods consist as follows: By the Royer process sweating is used for the removal of the hair; in the defendants' process the hair is removed by the method of liming, which has a different action upon the hide from that of sweating, wherein the method of sweating leaves all the fatty matter in the hides, which cannot be removed by subsequent operations, which is needful for a good product. Neither does the sweating, owing to its being a rotting or decomposing method, dissolve the albumen at the root of the hair. These are vital differences in the two methods. The next step in the Royer method is to dry the hides hard. This step does in no way resemble the next step taken in the defendants' method, in which, after the hides are limed, they are subjected to the several manipulations before spoken of, such as green-shaving, drenching, working out the impurities, washing, and drying, but not drying, as in the Royer method, hard, but simply nine-tenths dry. By the Royer method, after the hides have been dried hard, they are soaked in water fifteen minutes or long enough to loosen the extreme stiffness, which would be exceedingly great, owing to the hides having been sweated. The next step in the Royer method is to subject the hides to the action of the fulling mill without the application of any of the stuffing compounds, which is very injurious and is attended with a great liability of overheating the hide and the production of an inferior product. This differs from the step taken by the defendants in respect that the defendants' hides are smeared before the first operation of fulling with a quantity of the stuffing compound put on in a cold, pasty condition. This last variation in the similarity of the two methods makes a vital difference in the production of a good product, as the application of the stuffing compound previous to the introduction of the hides to the fulling mill prevents them from getting overheated and expelling too much of the moisture from the hide when there is no grease to take its place during the operation of fulling. The next step in the Royer method is to again subject the hides to the action of the fulling mill. Previous to this he smears them over with a stuffing compound composed of
97 tallow, tar, and rosin, put on in a warm, liquid state. This step also differs from the defendants' process in that the hides have not been subjected to the stretching machine before being put

back into the crib, which is a very vital point, as stretching the hides in that warm condition admits of a larger superficial area being obtained thereby, and, as the hides are sold by the square foot, naturally renders, on account of the increased superficial area by the action of the stretching machine, a larger profit.

The second difference is that in the Royer stuffing compound there is no bees-wax used. Consequently, when the leather is ready and finished for market, you don't have solid and plump flanks and thin places as you do when the bees-wax is used, and owing to this defect in this respect you certainly have an inferior product. The next difference between the two processes (or the Royer process and the defendants' process) is that after the hides are removed from the fulling machine the second time they are moistened four or five times during the day and the next day stretched and cut into pieces suitable for belting; whereas in the case of the defendants when the hides come from the action of the crib for the last time they are again subjected to the action of the stretching machine, which results in a still further increase of superficial area. Then, in place of being dampened four or five times the next day, as in the case of the Royer method, they are split down the back into sides, which leaves them ready for the subsequent operations without any further dampening. By our method we make a superior article of lace-leather, but no belting; by the Royer method he produces leather suitable for belting. The two methods differ in respect to the time employed in the production of the leather, that by the defendants' method being produced in less time than that by the Royer method, for the reason that a hide which has been limed, the fibre distended, purified of all its impurities, yields very much more readily to the action of the fulling mill, consequently taking much less time to produce the stock. With a sweated hide, owing to the nature of the method, the fibre is not distended, but given more of a tendency to agglutinate. The fatty matter is not destroyed, neither is the
98 albumen at the root of the hair dissolved. There has no chemical change taken place in the hide, consequently the hide is not left in a condition to be purged of its impurities, which must necessarily be left in the hide and, when dried, constitute a hard, brittle substance, which causes the hide to agglutinate, and thereby very much interferes with the softening when brought to the action of the fulling mill. This very fact explains the great difficulty that Mr. Royer had or one of the great difficulties in the production of his leather spoken of in some part of his deposition.

Int. 146. You say that there is no similarity between the process used by the defendants and the process described in the Royer patent further than that in both the hides are subjected to a fulling operation. State whether that was an old and well-known operation long prior to the alleged invention of Royer.

Ans. It was an old and well-known operation long prior to the invention of Royer.

Int. 147. Reference has been made to the patent granted to you, No. 182,106, and the same is in evidence as Complainant's Exhibit

Coupe Patent, No. 182,106. State whether the defendants in this case are the owners of that patent.

Ans. The defendants in this case are the owners of that patent.

Int. 148. And whether or not the process of preparing rawhide practised by the defendants and the manufacture of rawhide leather by them is carried on under and by the authority of said Coupe patent and by the aid of the process therein described and improvements therein.

Ans. The defendants use now and have done since the issue of that patent the method described therein in the production of their rawhide lace and picker leather; also the two or three improvements that have been made in the method are in use.

Int. 149. Mr. Royer, in his answer to Int. 16, makes reference to what he considers certain departures in the process as practised by you and the process as described in your patent, and specifies that the "sour" described in the patent is not used by you. Explain what is the fact as to this.

Ans. We make no departures whatever from the method specified in the patent further than what circumstances require. In regard to the sour, it is only a minor operation used in the method.
99 Under some circumstances it is continued; under others it is dispensed with. If we were using the drench, or, in other words, located in a place where the water used in the manufacture contained a quantity of lime or iron, it would make the water hard. Such water is not suitably adapted for drenching purposes; consequently some kind of ingredients containing ammonia have to be used to soften the water. These ingredients sometimes consist of one thing, sometimes of another, such as hen manure, pigeon manure, dry blood, and a variety of other ingredients. These ingredients have more or less of a stench to them, and leave it, to a certain extent, with the hide after being washed. If then subjected to a weak bath, composed of sulphuric acid and water, the stench is entirely removed. In case you use a drench made from soft water which contains no lime or iron, you can dispense with the use of the sour, and it is only in such cases as represented above that we make any change.

Int. 150. Mr. Royer then states that you do not use the slush or stuffing described in your patent, consisting of tallow, paraffine, and bees-wax, but that you leave out the paraffine, and, instead thereof, put in tar; and he then alleges that by reason of this change you employ a stuffing substantially different from the stuffing described in your patent. What have you to say as to this? State what is the fact.

Ans. We use a stuffing compound in the production of our leather such as I have heretofore spoken of. It is composed of well-known ingredients used in the manufacture of stuffing compounds for various kinds of leather, and which we think both we and everybody else engaged in the production of stuffing compounds have a perfect right to use, for the reason that they are all common and well known. We do not employ a stuffing which is substantially different from that described in the defendants' patent. We simply substitute one

well-known equivalent for another. We also use bees-wax in our stuffing compound that is not spoken of in the Royer patent.

Int. 151. You say that the ingredients of the stuffing compounds are all common and well known. To what time do you refer, and how was it prior to the date of Royer's alleged invention?

100 Ans. I refer to the stuffing compounds mentioned in both patents. At the time of Royer's alleged invention all the ingredients (tallow, tar, rosin, bees-wax, paraffine) were well known, and they were well known prior to this alleged invention.

Int. 152. In the same connection Mr. Royer alleges that by the change from paraffine to tar you appropriated a stuffing substantially the same as that described in his patent. State whether the stuffing used by you is the same as the stuffing described in the Royer patent, or what is the fact.

Ans. The statement is not correct. Our stuffing, owing to its containing bees-wax, is of a superior quality for our class of leather or for leather produced by our method to that of Royer's. The simple fact of substituting tar for paraffine does not change the nature of the stuffing compound.

Int. 153. By whom were the processes and machinery employed by the defendants in the preparation and manufacture of rawhide leather devised and developed?

Ans. They are the whole, sole offspring of my own mind.

Int. 154. State whether you ever at any time obtained any ideas or "appropriated" anything from Mr. Royer or from his patents or from his machines or from his leather, or in any way whatever.

Ans. I never, at any time, got any ideas or appropriated or in — way copied after him, either in machinery or in anything in any way connected with the manufacture of leather. I never knew him nor of him until after my method had been developed.

Int. 155. Mr. Royer, in his answer to Int. 9, states that he at one time shipped rawhide to the East, and that he continued to sell it in a small way in the East for a certain period, but that subsequently parties in the East began to manufacture and put upon the market an article of fulled rawhide, which they are now selling in large quantities, whereas his own sales in the East have practically ceased. If he intends to include you or your firm among such parties in the East, and if he means to have it understood that your rawhide leather has taken the place of his in the Eastern market, to what is that fact due?

Ans. My impression is, regardless of what Mr. Royer may
101 think or may have said in relation to this matter, that, owing to the superiority of our product, we drove him out of the Eastern market and have, in some cases, sent our leather directly to his own city.

Cross-examination by THOMAS L. LIVERMORE, Esq., of counsel for complainant:

Cross-int. 156. Was the first rawhide leather which you knew of being on the market that which Anton Heim, of New York, showed you about the year 1875?

Ans. To the best of my knowledge it was not.

Cross-int. 157. Did he show you some, about the year 1875, that he had on sale?

Ans. My impression is that about that time I saw three different kinds of rawhide leather. If my memory serves me right, some of it was manufactured by Anton Heim himself; some of it was made in St. Louis, and I think some of it came from California. Anton Heim was a dealer in leather.

Cross-int. 158. Was it at Anton Heim's store in New York that you saw the different kinds of rawhide leather which you saw at that time?

Ans. It was.

Cross-int. 159. Did you first see them all at the same time?

Ans. I couldn't say for a certainty whether I did or not. I used to be there about once in two weeks at that time.

Cross-int. 160. Whose manufacture did you then understand the rawhide leather from St. Louis and San Francisco to be?

Ans. At that time I was not really aware of whose they were, but subsequently I became acquainted with the fact that one of them came from Royer, in California, and the other was manufactured, if I remember right, by Shultz and a brother of Royer's, who had associated themselves in business.

Cross-int. 161. And the Royer in California that you speak of you understand to be the complainant in this suit, do you not?

Ans. Yes, sir.

Cross-int. 162. When you first saw this rawhide leather from California did you discover the fact that there was tar in it?

Ans. If my memory serves me right, they all had tar in them.

102 Cross-int. 163. And if they did have tar in them do you think you discovered that fact when you first saw them?

Ans. I have no doubt I did.

Cross-int. 164. Had you made any rawhide leather for the market before you first saw the rawhide leather from California at Heim's, as you have related?

Ans I had.

Cross-int. 165. When did you begin to make that rawhide leather for the market?

Ans. About the middle of 1874.

Cross-int. 166. Did you put any of it on the market before you saw that California leather at Heim's?

Ans. I did.

Cross-int. 167. To whom did you sell it, and under what name?

Ans. I sold it to the trade in a general way, put up in the shape of cut lacings. We didn't designate it at that time from the other leather we were manufacturing.

Cross-int. 168. In what sort of a machine was the rawhide lacing softened?

Ans. Under an ordinary power pin block.

Cross-int. 169. What was the slush or stuffing that it was treated with?

Ans. At that time we used to vary the stuffing compound.

Cross-int. 170. Did you use any paraffine in it?

Ans. We did.

Cross-int. 171. How was the stuffing applied to the hides that were softened under that pin block?

Ans. It was applied with a brush and fulled in by the action of the pin block.

Cross-int. 172. Can you name any one of the trade to whom you sold any of the lacing made from that rawhide leather before you saw the California leather at Heim's?

Ans. No, sir; for the reason that we made but very little of it. What we did make was cut up and mixed in with the other leather that we were then manufacturing.

Cross-int. 173. Why didn't you make more of it?

Ans. For the reason that we had no facilities for softening
103 in an entirely satisfactory manner, and then again we were extensively engaged in the manufacture of other leather and couldn't spare a great deal of time. It was very expensive stuff to make with the crude facilities that we had for fulling.

Cross-int. 174. Did you succeed in softening any hide completely throughout under that pin block?

Ans. We did.

Cross-int. 175. Was it usual to do so under that pin block?

Ans. It was usual to do all that we did at that time.

Cross-int. 176. How many sides of rawhide leather did you soften completely under that pin block?

Ans. I couldn't say.

Cross-int. 177. Was it as many as fifty, in your opinion?

Ans. I couldn't say definitely. The pin block was not satisfactory for softening, and I proceeded, as soon as it was convenient to do so, to get some other machine to do the work.

Cross-int. 178. The rawhide leather softened under this pin block was merely an experiment with you, was it?

Ans. The rawhide leather softened under the pin block was not an experiment; the method of softening was.

Cross-int. 179. Had you ever seen any rawhide leather fit for the market before you produced this with the pin block in 1874?

Ans. I had.

Cross-int. 180. When and where first?

Ans. I saw rawhide leather fulled in a fulling mill at the manufactory of James Davis, in Pawtucket, R. I., in the latter part of 1863.

Cross-int. 181. What was done with that leather—what became of it after it came out of the fulling mill?

Ans. It was put through subsequent processes and, to the best of my knowledge, was sold.

Cross-int. 182. Was it tanned or tawed in whole or in part?

Ans. It was pure rawhide leather, softened by the action of the fulling mill at the same time grease was fulled into it.

Cross-int. 183. Was anything besides grease fulled into it?

Ans. No, sir; it was a pure rawhide, softened by mechanical action.

104 Cross-int. 184. How much of that rawhide leather was made at Davis's?

Ans. I could not say definitely, but I should think from the length of time they were manufacturing it they must have produced a number of thousands of hides.

Cross-int. 185. What uses was it sold for and what name was it sold under?

Ans. Those were large, heavy belt hides, and I think that particular leather went into the army for belts for soldiers, although it was suitable to a certain degree, or in the same degree that the Royer leather is, to be put into machine belts and also to be used for lacing.

Cross-int. 186. And would you be understood as saying that this rawhide softened in a fulling machine and tested with grease alone was fit for soldiers' belts?

Ans. It would be necessary, in order to use the leather for soldiers' belts, to submit it after coming from the fulling mill to some operation to extract the grease, for the reason that if it was left in it would grease the soldiers' clothes. If it was desired to use the leather for machine belts or lacing the grease need not be extracted, but after coming from the fulling mill it might be subjected to the same methods as that described in the Royer patent, which would make it as good as Royer's for belting purposes if a certain amount of solid substance, such as rosin or bees-wax, had been forced into it during the milling or fulling operation.

Cross-int. 187. Did you ever, before 1874, see any other rawhide leather than this which was made at Davis's, as you have stated?

Ans. There was some partially rawhide leather, or, in other words, leather which was part raw and part tanned, if my memory serves me right, made there in 1853, the latter part of 1853. This was fulled with both tallow and oil. This is all I remember at the present time.

Cross-int. 188. Were you led by seeing the rawhide leather at Anton Heim's, as you have stated, to go to Philadelphia and there see a Royer machine fulling rawhide leather?

Ans. I was not. I did at a subsequent time go to Philadelphia to see a Royer machine, but prior to that date I had a break-

105 ing machine of my own in operation. I am aware that that statement has been made, but it is not a fact. The party in Philadelphia did put in the Royer process, which cost then several thousand dollars. After a short time working they were compelled, on account of the imperfection of the process and machine, to abandon its use. The successors to the same firm are now using my process and machine and are making a success of it, and were here to see me no later than the other day to negotiate for another machine, notwithstanding they have the Royer machine on hand at the present time. I would further state that the machine they put in was not the machine spoken of in the patent in suit, but was an improved one, or reported to be an improved one, gotten up by Louis Royer.

(All of the answer following the word "fact" objected to as irresponsive and not called for.)

Cross-int. 189. Did you ever use tar in the slush or stuffing employed by you in making your rawhide leather before you first saw the rawhide leather at Anton Heim's, from California, as you have stated?

Ans. I did not.

Cross-int. 190. When you first began using paraffine in making rawhide leather by the process described in your patent No. 182,106, of Sept. 12, 1876, was paraffine cheaper than tar to use?

Ans. No, sir.

Cross-int. 191. Did you first use paraffine in practising that process of making rawhide leather or did you first use tar in that process?

Ans. Paraffine.

Cross-int. 192. Why did you not use tar at first?

Ans. I can't answer that question. I don't remember the reason.

Cross-int. 193. Do you think that rats and mice would not attack rawhide which had been limed by your process and then stuffed with grease, without any tar or paraffine?

Ans. I do think so.

Cross-int. 194. Do you not think they would be attracted by the tallow with which the hide had been stuffed?

106 Ans. They might, if there was no other substance but tallow used in the stuffing. If paraffine was used in connection with the tallow, they would not. Rats will not pray upon a hide that has been sufficiently limed to kill the fatty matter and then dried. It is the pure tallow or the fatty matter contained in the hide that the rats seek after.

Cross-int. 195. Will rats attack the leather which is tawed or tanned on the outside?

Ans. Not if the hide has been thoroughly limed, sufficient to kill the fatty matter the hide contains, or if paraffine was used in the stuffing that was employed in the tawing process. If chemicals were also used in connection with the stuffing, that would also keep off the rats.

Cross-int. 196. Do you think that rawhide leather, simply stuffed with grease, as you have stated it was done at Davis's, would keep for an indefinite length of time in store without moulding or decaying if in a damp place?

Ans. It would keep in any ordinary store, such as is usually used for the storage of leather. To answer the question fully it would be necessary to ascertain the degree of dampness to which the leather would be subjected.

Cross-int. 197. Was the fulling machine which you say was used in making rawhide leather in 1874 the common fulling machine, consisting of a trough with beaters or stocks swinging in it?

Ans. No, sir.

Cross-int. 198. What was it?

Ans. It was a power pin block; one of my own invention.

Cross-int. 199. You have stated that in the machine which is used by you for fulling rawhide leather a high degree of heat is produced by the friction of the hides upon the machine. Do you regard that as useful or hurtful in the process?

Ans. What I meant by a high degree of heat, in the statement that you have referred to, must be taken in the meaning of high in connection with the manufacture of leather, which ranges anywhere from sixty to one hundred degrees; ninety degrees would be considered high. I do consider that a degree of heat ranging from
107 eighty to ninety degrees is needful for the production of all leather manufactured by a fulling method; but I should in no case recommend the raising of the temperature to over one hundred degrees, as it would be detrimental to the quality of the stock.

Cross-int. 200. Do you think that a degree of heat equal to eighty degrees was produced in the old-fashioned fulling machine or in your pin-block machine?

Ans. I do.

Cross-int. 201. Why do you think that rawhide leather, which is soft and pliable and has great tensile strength, is not adapted for belting?

Ans. For the reason that it is porous; it hasn't got the hugging quality; consequently it will not transmit the power that belting will produced in a different way.

Cross-int. 202. What is there now in the liming process practised by you that was not in the old liming process which has always been practiced by tanners?

Ans. In the ordinary course of hard tanning it is only customary to lime the hide sufficient to take the hair off. This style of liming would not answer for pure rawhide leather. The hide requires to be limed to such an extent as to destroy the fatty matter contained in the hide and dissolve the albumen that lies at the root of the hair, so that it can be removed in the subsequent operations, which is absolutely necessary to make a good article of pure rawhide to be used for lace-leather purposes. Now, what is new about this method is the discovery of the degree to which this liming must be carried. If we were to lime in the ordinary way, as bark tanners do, the hide would not be put in a condition for the removal of those injurious substance-, and the consequence would be that the liming process would not work for our method.

Cross-int. 203. Do you mean that you discovered that it was useful to leave the hides in the lime longer than had been the custom of tanners, or do you mean more than that?

Ans. I mean that the time of leaving the hides in the lime had nothing to do with it. The secret was or is to lime the hides in such a manner and to such an extent that the fatty matter will be destroyed.

Cross-int. 204. In the use of the fulling machines on raw-
108 hide leather which was practiced by Davis, as you have stated, and in the use of your pin-block machine, were the hides put

into your machines when nearly dry, as is the case in the use of the machine which you now use?

Ans. As regards the degree of moisture contained in the hides fulled at Davis's, as spoken of heretofore, I don't just exactly remember; but in reference to the hides that was fulled under the pin block, they are about similar to the manner in which we full them now.

Cross-int. 205. Did you ever know of birch tar being used in the stuffing of rawhide leather?

Ans. I never did.

Cross-int. 206 (*de bene esse*). Do you understand that in the manufacture of Russia leather birch tar has ever been employed in a stuffing containing tallow and rosin or bees-wax to aid these articles to penetrate the leather?

Ans. I understand that in the manufacture of Russia leather for boots that tallow and birch tar combined have been used in the production of that leather.

Cross-int. 207 (*de bene esse*). Do you understand that these ingredients were fulled into leather by a fulling machine?

Ans. I understand they were fulled in by some mechanical action.

Cross-int. 208. Where had you known tar to be used in a stuffing in the manufacture of leather in this country prior to 1867?

Ans. Not personally anywhere.

Cross-int. 209. In reading the patents No-. 77920 to Herman and Louis Royer and 91772 to Herman Royer, did you gather the impression that the stuffing therein described was to be applied to the hides with a brush or by other means when the hides were out of the machine?

Ans. I refer that the stuffing is to be applied when the hides are out of the machine, for the reason that it is not practical to apply it when the machine is in operation. It could be done.

Cross-int. 210. You stated in answer to Int. 133 that not a tenth part of the fulled rawhide manufactured in the United States has any tar in it or any equivalent of tar. Is it not true that all
109 the fulled rawhide you know of is stuffed with a stuffing containing rosin or wax, and that in order to carry it into the rawhide it is combined with tar or paraffine or some substance which is the equivalent of these substances for carrying purposes?

Ans. It is not.

Cross-int. 211. How is the rosin or wax carried into the rawhide which does not contain the tar or paraffine or their equivalent?

Ans. They don't all use rosin and wax. Many of them simply use tallow and castor oil.

Cross-int. 212. What is there in such hides to repel the rats and mice?

Ans. All the hides are limed.

Cross-int. 213. But after they are limed they are stuffed with the tallow, are they not?

Ans. Tallow and castor oil together.

Cross-int. 214. What repels the rats and mice from the tallow?

Ans. I suppose it must be the castor oil.

Cross-int. 215. Do you assert, upon your personal knowledge, that rats and mice will not attack such rawhide leather?

Ans. I never have seen nor heard of rats and mice attacking leather made in that way.

Cross-int. 216. Do you assert upon your personal knowledge that they will not?

Ans. My personal knowledge with that is very limited. I have seen the leather of the various manufactories in the stores from time to time and I have never seen any of it attacked by rats, but as to my swearing absolutely that they will not, that I couldn't do.

Cross-int. 217. You have said that it was not known at the date of the Royer patent suit that the liming method could be used in producing rawhide leather. But I understand you to agree that it was well known at that time that the liming process would remove the hair from hides. Is not that so?

Ans. It is.

Cross-int. 218. And do you assert upon your personal knowledge that a hide unhaired by that old liming process could not be converted into rawhide leather that was merchantable by the process that is described by the Royer patent which is in suit?

110 Ans. I mean to say that a hide limed simply to remove the hair will not produce a good article of fulled rawhide leather.

Cross-int. 219. It was well known long before the patent in suit that all the lime could be drenched out of the hides after they were unhaired by the liming process, was it not?

Ans. I don't think it was well known, for the simple reason that the ordinary tanning process does not particularly require that all the lime should be removed, for the reason that there is an agent in all vegetable tanning liquors that neutralizes the impurities that may be left in the hide after drenching. Therefore the thorough removal of all these things was not required.

Cross-int. 220. Was this removal required for tawing leather?

Ans. Not so much so when chemical ingredients were used in connection with the fats.

Cross-int. 221. Do you say that the process described in the patent in suit will not produce leather suitable for lacing?

Ans. I do not mean to say so, but I mean to be understood that a hide treated by the sweating method will not make as good and desirable an article as one produced by the liming method when manipulated as we manipulate it.

Cross-int. 222. Do you produce any belting by your process?

Ans. We produce belting, but it is by another process, in combination with a part of the process set forth in the patent before spoken of.

Cross-int. 223. Do you full this belting in the machine described in your patent No. 202,414 and stuff it with tallow, bees-wax, rosin, and tar in the same proportions as you use on your lace-leather?

Ans. In order to answer that question intelligently or in such a manner that anybody could get a correct knowledge of the idea I

wish to convey, it would be necessary to give a representation or an explanation of how our belting is produced.

Cross-int. 224. In your answer to Int. 146 you say that the fulling operation to which the hides are subjected by the defendants and which is described in the Royer patent was well known prior to the invention of Royer. Do you mean by this that the process of winding and unwinding hides upon a revolving shaft enclosed
111 within a crib and subject to pressure on all sides, such as is used by you, was known before the invention of Royer, described in his patent of May 12, 1868, No. 77920?

(Objected to by counsel for defendants as immaterial and irrelevant, and for the reason that the machine employed for fulling is no part of the process described in the patent in suit, which simply provides that the hides shall be subject to a fulling or softening operation.)

Ans. I do.

Cross-int. 225. Where was it known and by whom?

(Same objection.)

Ans. It was known in San Francisco and practiced in the year 1863 by Louis Royer.

Cross-int. 226. Do you state this on your personal knowledge?

(Same objection.)

Ans. Louis Royer told me personally himself that he had such a machine as above described in operation at that time.

Cross-int. 227. Do you not know that it is improper to state a thing like this positively when you are simply repeating what another told you, without any personal knowledge on your part?

Ans. It is not my intention to state it as absolute personal knowledge, but as receiving it from him.

Cross-int. 228. Is it true that one of the improvements which you have adopted since you took out your patent No. 182,106, dated Sept. 12, 1876, is the substitution of the tar for the paraffine mentioned therein?

Ans. I don't consider or mean to convey the idea that the substitution of tar for paraffine is one of the improvements made on the patent.

Cross-int. 229. Do you think you have supplanted Royer's rawhide leather in the Eastern market with your rawhide leather?

Ans. I do to a greater or less extent, for the reason that I see none of his leather at the present time; neither have I for a long time back seen any of it offered for sale in the Eastern market.

Cross-int. 230. When did you begin to put yours, treated with the stuffing containing tar, on the Eastern market, and at what price net did you then sell it?

Ans. I think some time in the latter part of 1876. The
112 price, if I remember right, was either thirty or thirty-three cents per square foot, with a small discount, which I don't remember definitely how much it was at this time.

(Adjourned.)

FRIDAY, *April* 29, 1887.

Present: Samuel G. Croswell, Esq., of counsel for complainant; Wilmarth H. Thurston, Esq., of counsel for defendants.

Direct examination resumed:

Int. 231. You say in answer to cross-int. 177 that the pin block was not satisfactory for softening. Explain what you mean.

Ans. It was not satisfactory in the respect that it would not do the quantity of work I required it to do. It would soften leather completely and perfectly, but it would not do the work quick enough.

Int. 232. In answer to cross-int. 187 you were asked if you had ever before 1874 seen any other rawhide leather than that which was made at Davis's in 1863; to which you replied that you had seen some partially rawhide leather—that is, leather which was part raw and part tanned—as early as 1853, and then added that that was all that you remembered at the time you were testifying. Please explain what you meant, and state what are the facts as to whether you had seen any other rawhide leather before 1874.

Ans. In answering that question I had special reference to lace-leather. I had prior to that date and as early as 1852 seen other kinds of rawhide leather.

Int. 233. Whether or not this rawhide leather which you saw as early as 1852 was leather which was prepared without any tannin or chemicals, but simply softened by mechanical action and cured by grease.

Ans. It was pure rawhide leather, softened by mechanical action and cured by fulling the grease into it.

Int. 234. Did you continue to see and have knowledge of such leather from 1852 on?

Ans. I have seen and had knowledge of it at various times from that time to the present.

Int. 235. To what rawhide leather do you refer?

113 Ans. I have reference more particularly to glove leather, some varieties of bag leather, also some varieties of pocket-book leather, also chamois leather.

Int. 236. Whether or not the leather prepared for the various uses referred to in your last answer by mechanical action and by fulling grease into it is rawhide leather in the same sense and to the same extent as leather similarly prepared for use as lacing or belting.

Ans. They are substantially the same. They are both produced by the same method, both softened by mechanical action, both have grease fulled into them, and both are pure rawhide leather.

Int. 237. You were asked in cross-examination (cross-int. 189) if you had ever used tar in the stuffing employed by you in making your rawhide leather before you saw certain rawhide leather at Anton Heim's store, in New York; to which you replied that you had not; from which the inference may be sought to be drawn that you got the idea of using tar from that leather which you saw at Heim's. What is the fact as to that?

Ans. The fact is that I got no idea of the use of tar from that leather that I saw in New York. It was long after that date before I began to use tar. At that time and long prior to that, even as early as 1866, I had been using a stuffing compound composed of various ingredients used in the manufacture of leather, some of which were tallow, paraffine oil, rosin. This stuffing compound gave very good satisfaction. I used it very extensively on the various kinds of lace-leather, also used it for a considerable time—in fact, worked through many thousands of pure rawhide leather with no other stuffing compound; but subsequently I began to look round to cheapen the production of leather. I afterward substituted tar for paraffine, and by the change made a saving in the cost of the production of the stuffing compounds.

Int. 238. You say that you used the paraffine stuffing on the various kinds of lace-leather manufactured by you. Do you mean to include the tanned and the partly tanned leather as well as the pure rawhide?

Ans. I mean to include all kinds of lace-leather. That
114 which was tanned with chemicals, that which was partly tanned or tawed, and the pure rawhide.

Int. 239. Whether or not you used the same kind of stuffing upon all these several descriptions of lace-leather.

Ans. I used the same kind of stuffing on all the kinds of leather described.

Int. 240. You were asked (cross-int. 192) why you did not use tar at first in making your rawhide leather, to which you replied that you couldn't answer that question. Explain what you meant, and what were the facts as to why you did not use tar at first.

Ans. What I meant by that answer was that it was not just exactly fresh to my mind at that time why I should make little changes and variations in some of the details employed in the production of leather. It is a very customary thing to vary little details from time to time in the manufacture of leather. A man may be asked a question, the reason why he did so and so ten years ago or five years ago, and he might not be able to answer, on the spur of the moment, definitely the reason why he did so and so. It is a common custom in the manufacture of all kinds of leather, both in the tanning process and the currying process, to make little changes in detail from time to time, such as substituting one ingredient for another. A man might be making the stuffing compound composed of two or three different ingredients. After awhile he might decide, for some cause or other, to substitute some other ingredient for one of the ingredients that he was then using. You might ask him in five years from that time, on the impulse of the moment, why he did so. He might not be able to tell you. That was substantially my position at the time, although I knew very well at the time I made the change what I did it for.

The reason that I didn't use tar at first was because I was using a stuffing compound, with a little variation, which I had been using for years, that answered the purpose and gave good satisfac-

tion, as far as producing a perfect article of stock was concerned; but subsequently, desiring to cheapen the production of leather, I substituted the use of tar for paraffine, which could be brought for much less.

Int. 241. Reference was made in the cross-examination
115 to your going to Philadelphia and seeing there a Royer machine. State whether you went to Philadelphia for the purpose of getting any ideas from the Royer machine, or whether, as a matter of fact, you did get any ideas from that machine.

Ans. I went to Philadelphia at one time, but not to see the Royer machine; but while I was there it was suggested by a friend of mine that I should go and see the machine at Eckfelt & Ritchie's. We had been selling these parties lace-leather for a long time. I went there. I saw what purported to be an improved Royer machine, gotten up by Louis Royer; but prior to that time I had a machine of my own in operation, consequently I could have got no ideas from the Royer machine.

Int. 242. You stated, in answer to cross-int. 194, that rats might be attracted by the tallow stuffed into a lime hide if nothing was used in the stuffing but tallow, but that if paraffine was used in connection with the tallow they would not. How is it in case oil be used with the tallow?

Ans. If oil was used with the tallow (that is, any of the common oils, such as is ordinarily used in the production of stuffing compounds), rats would not be attracted.

Int. 243. Name some of the oils to which you refer.

Ans. Cod oil, straits, bank, menhaden, or any of the ordinary fish oils that are commonly made.

Int. 244. You were asked in cross-int. 196 whether rawhide simply stuffed with grease, as was done at Davis's, would keep for an indefinite time without moulding or decaying if in a damp place; to which you replied that it would keep in any ordinary store, and that to answer the question fully it would be necessary to ascertain the degree of dampness to which the leather would be subjected. State whether or not the same would be true of rawhide leather which had been stuffed with a composition containing tar, and how such leather would compare with that made at Davis's, so far as the question of moulding or decaying is concerned.

Ans. Any kind of leather, no matter whether it is rawhide leather or any other kind of leather, stuffed with a tar stuffing compound or with an ordinary stuffing compound, where no tar is used, will keep for an indefinite time in a place which is ordinarily
116 used for storing leather; but neither rawhide leather nor any other kind of leather, no matter what the stuffing compound is made of, with or without tar, will keep in a wet place without mildewing.

Int. 245. Subsequent to the time when you substituted tar for paraffine in your stuffing compound have you at any time, in the preparation of your rawhide leather for the market, omitted tar altogether from the compound, putting nothing in its place? If so,

state under what circumstances and to what extent you have so manufactured rawhide leather without tar or any equivalent.

Ans. It is a common practice with us, during the hot summer months, when the extreme heat causes tallow to become very soft (in fact, almost so that it will run, like oil), we dispense with the use of tar altogether, or its equivalent, for the reason that the other ingredients will go in without its assistance. We have manufactured at various times through the extreme hot weather of each year many thousands of hides without the use of tar or its equivalent.

Int. 246. What became of those hides?

Ans. They were finished and sold in the ordinary way.

Int. 247. Did you ever receive any complaint in regard to them in any way?

Ans. No, sir.

Int. 248. At what price did you sell them as compared with the price of leather in which you used tar?

Ans. We never changed the price of our leather. We always get the same price for it whether we vary the stuffing compound or not. We got the same price for that leather made without the use of tar or its equivalent that we got for that in which we used the tar.

Int. 249. And how was it in reference to the leather on which you used the paraffine stuffing, prior to the substitution of tar for the paraffine? Did you get the same price also for that as you afterwards did for the tar-stuffed leather?

Ans. If I remember right, we got the highest price for the paraffine leather that we ever got for any. When we first produced the leather it was sold at a higher price than it was subsequently.

Int. 250. Referring to the Royer patent in suit, No. 149,954, please state whether, as you understand from the specification of
117 that patent, the particular machine to be employed for fulling or softening the leather forms any part of the process or method described in said patent—that is to say, whether in the practising of said process it is necessary that any particular kind or construction of machine be employed to do the fulling.

Ans. It is not necessary that any particular kind of machine should be used for fulling. There are a variety of machines for fulling leather, but that process is not particularly dependent upon any one of them. I have manufactured rawhide leather by the aid of four or five different fulling machines. The Royer process does not depend upon any particular machine for fulling. The fulling can be done on any machine.

Int. 251. I observe, in referring to the statement which was added to your deposition taken by the complainant in the opening, under date of April 7, 1885, in response to a request of complainant's counsel, you say that you make no modification in the formula of your stuffing therein contained on account of the season of the year. That statement might, perhaps, without explanation, seem to conflict with some of your above answers. Will you please to explain what you meant?

Ans. The idea that I wished to convey by that was that the proportions as regards to tallow, rosin, and bees-wax would not vary. We might put in more or less tar according to the temperature of the atmosphere, or we might leave it out altogether, but we should not change the proportions of the other ingredients. They would always be about the same.

(Adjourned.)

TUESDAY, *May* 24, 1887.

Present: Thomas L. Livermore, Esq., counsel for complainant; Wilmarth H. Thurston, Esq., counsel for defendants.

Cross-examination resumed:

Cross-int. 252. Referring to your answer to Int. 237, I ask you whether you meant to be understood in that answer as saying that you used paraffine in a compound for stuffing pure rawhide leather as early as 1866.

Ans. It was not my intention to convey any such idea, and
118 I think the reading of that answer does not convey any such idea. The idea that I wished to convey was that I had used paraffine as early as 1866 and had continued to use it for a good many years, and even after I had commenced the manufacture of pure rawhide. I had used it on many thousands of sides and hides prior to the substitution of tar.

Cross-int. 253. On what did you use paraffine as early as 1866?

Ans. On all the various kinds of lace-leather that I was then manufacturing.

Cross-int. 254. Do you refer to tanned and tawed leather, or what else?

Ans. I mean tanned, partially tanned and tawed, and partially raw.

Cross-int. 255. When did you get up your first breaking and boarding machine for rawhide leather? I refer to that one mentioned by you in your answer to Int. 241.

Ans. I can't just fix the time at present, but, if my memory serves me right, it must have been about the year 1874.

Cross-int. 256. How do you know that the common oils used in the production of stuffing compounds will render rawhide stuffed with tallow unattractive to rats and mice?

Ans. I would inquire what kind of rawhide is meant.

Cross-int. 257. I refer to the rawhide such as is used for lacing. Please answer the question, and I refer you to your answer to Int. 242 to specify the kind of rawhide.

Ans. Referring to Int. 242, I would say I know that from practical experience. You might take a limed hide and leave it in its raw state for an indefinite time, and it would not be attacked by rats. You spread it over with tallow, and the rats would go for the tallow, but not the hide. You unite oil with the tallow, and the rats would not touch it.

Cross-int. 258. When stuffing rawhide leather with tallow without

tar, as stated in your answer to Int. 245, what else is there in the compound besides tallow?

Ans. Rosin and bees-wax.

Cross-int. 259. To whom have you sold lace-leather prepared in this way in any considerable quantity?

119 Ans. We have sold leather prepared in that way to Bickford, Curtiss & Deming, Buffalo, N. Y. (the firm is now changed to Bickford & Curtiss); to Joseph Sharp, Cincinnati, Ohio; T. W. Todd & Co., St. Louis, Mo.; J. B. Hoyt & Co., New York (the firm is now Fairweather & Le Drew); William H. Stoyle & Co., Philadelphia, Pa., and quite a number of others.

Cross-int. 260. To what article of rawhide leather did you refer in your answer to Int. 54 as being in common use as an article of commerce?

Ans. I had reference to any and all kinds of leather softened by a mechanical process with oil and grease fulled into it.

Cross-int. 261. In answer to cross-int. 187 you named partially rawhide leather as the only kind of rawhide leather you knew prior to 1874, excepting that referred to by you in answer to cross-int. 185, which was used for soldiers' belts. Can you now recall any other kind of rawhide leather, prior to 1867, which was an article of commerce?

Ans. At that time I had more especial reference to what was called army-belt leather and lace-leather, but there were other kinds of leather, such as chamois leather, bag leather, and glove leather.

Cross-int. 262. Do you now say that there was any pure rawhide lace-leather known to you prior to 1868?

Ans. That which I have made in an experimental way myself, and sold it from time to time as cut lacings put in with our other leather.

WILLIAM COUPE.

Attest: ISAAC H. SOUTHWICK, JR.,
Special Examiner.

Deposition of David McKelvey.

Direct examination by WILMARTH H. THURSTON, Esq., of counsel for defendants:

Int. 1. What is your name, age, residence, and occupation?

Ans. My name is David McKelvey; age, forty-five; occupation, currier; reside in Pawtucket.

Int. 2. How long have you been a currier and where have
120 you been and where are you now employed, stating the positions which you have occupied?

Ans. I have been a currier thirty years. I am now employed at the James Davis Belting Company; I have worked for William Coupe & Co., of Attleboro'; I have worked for Richard Butler, Central Falls; I have worked for Ira England, Providence; I have worked in the belt shop; I have taken charge of the belt-currying;

I have worked some in the tan yard—tanning; I have worked at knife-work, and now I take charge of all the currying for James Davis Belting Company.

Int. 3. Where did you first go to work and when?

Ans. I went to work at the currying business for James Davis & Co., in Pawtucket, in 1857.

Int. 4. How long did you remain with James Davis & Co. after that time and how much of the time since then have you been employed at that establishment by the firm named or its successors?

Ans. I stayed there three years and then went to the war, and was gone three months. I came back, went to work, and stayed about ten years; went to South Attleboro' for five months; came back and worked for the rest of the time to the present at James Davis's establishment, with the exception of about two months, which covers the time I was at Butler's and England's.

Int. 5. Do you remember whether at the time you went to work at Davis's, in 1857, as you have stated, that concern was engaged in making any lace-leather?

Ans. Yes, sir; it was.

Int. 6. What kind or kinds of lace-leather were they making at that time, if you remember?

Ans. Tawed, or salt and alum.

Int. 7. Do you remember how this lace-leather was prepared at that time; and, if so, will you please describe the method?

Ans. Lime, drenched, put into a salt and alum bath, partially dried, stuffed, fulled, and finished.

Int. 8. You say the hide was put into a salt and alum bath. What was the purpose of this step and what effect did the salt and alum bath have upon the hide?

121 Ans. Tanned it, softened it, and made it so that we could work the grease into it in order to keep it soft.

Int. 9. Do you remember whether the hides were subjected to the salt and alum bath sufficiently long to tan the hide entirely through, or what was the fact in this respect?

Ans. No; they were not tanned thoroughly. They had a raw streak through the centre.

Int. 10. You say that these hides after coming from the salt and alum bath were partially dried, stuffed, and fulled. Please explain what you meant by stuffing and by fulling.

Ans. Stuffing is putting tallow and oil to them. Fulling is pounding or working that grease into them until they become soft.

Int. 11. What effect did this fulling and stuffing with grease have upon the raw streak which you say was left in the hide after it came from the salt and alum bath?

Ans. It made it become soft and pliable—cured it.

Int. 12. What was used for the stuffing at Davis's at the time referred?

Ans. Tallow and straits oil.

Int. 13. What means did they have there at that time for working or fulling this grease into the hide?

Ans. Hand-pounded on a pin block.

Int. 14. Please state whether or not this method of preparing lace-leather, which you have described, consisting of tanning the hide part way through by salt and alum and then softening and curing the part that remained raw by fulling and stuffing it with grease, has continued to be employed at Davis's from 1857 on.

Ans. Yes; it has. Only they don't tan it so much as they did when I first went there.

Int. 15. Why, if you know, have they adopted the plan of tanning the hide less than they did in 1857?

Ans. Because it makes it tougher.

Int. 16. Do you know why they tanned it more at that time in 1857 than they did afterwards?

122 Ans. Because they didn't have the machinery to soften it as they do now.

Int. 17. Have they since obtained other machinery than the hand pin block for fulling and stuffing grease into this leather; and, if so, what other machine or machines have they used for this purpose besides the hand pin block?

Ans. Yes, sir; they have the power pin block and what we call the beaters.

Int. 18. Explain what you mean by the "beaters."

Ans. They are a fulling machine, hammers going back and forth.

Int. 19. State whether or not lace-leather made in the way which you have described was manufactured in the regular course of business at Davis's from 1857 on and put on the market for sale.

Ans. Yes; it was.

Int. 20. State generally whether it was manufactured in large or small quantities.

Ans. From three to six hundred hides a week.

Int. 21. At any time while you have been at Davis's have they ever made there any leather which was left entirely raw or untanned—that is, which was not subjected in any way to the action of tanning materials, either bark tanning or chemical?

Ans. Yes, sir.

Int. 22. When, if you remember?

Ans. In 1862 or 1863.

Int. 23. Please state how this leather which was made in 1862 or 1863 and which was not tanned at all was prepared.

Ans. Limed, drenched, fulled, stuffed, and finished.

Int. 24. By fulling and stuffing do you mean the same as above testified to by you?

Ans. Yes; the same thing.

Int. 25. State whether or not this leather when prepared and ready for market was pure rawhide throughout.

Ans. It was rawhide.

Int. 26. In preparing this rawhide leather what means were employed to full and stuff the grease into it?

123 Ans. The fulling machine.

Int. 27. State whether or not this entirely pure rawhide was partially dried before being submitted to the fulling and stuff-

ing operation, as in the case of the salt and alum leather above referred to by you.

Ans. Yes; it was partially dried.

Int. 28. For what purpose was this pure rawhide leather used?

Ans. For army leather—for making belts for the soldiers.

Int. 29. And for how long was its manufacture continued, if you remember?

Ans. Probably two years.

Int. 30. And whether or not it was manufactured and sold in the regular course of business.

Ans. Yes, sir; it was.

Int. 31. And whether in large or small quantities, if you remember.

Ans. About a hundred hides a week, I should judge.

Int. 32. What was the principal difference in the method of preparing this rawhide leather and that employed in preparing the salt and alum leather above referred to by you?

Ans. We omitted the salt and alum bath.

Int. 33. What was the effect of this omission of the salt and alum bath as to the amount of softening or fulling required—that is, did it require more or less fulling when you omitted the salt and alum bath?

Ans. It required more fulling when the salt and alum bath was omitted.

Int. 34. Do you know whether or not the method of preparing leather from hides by fulling them by mechanical action and working grease into them is or is not an old process or method in the art of leather-working?

Ans. It is an old process.

Int. 35. How long has it been known, should you say?

Ans. I have known it for twenty-seven years.

Int. 36. Do you know how those kinds of leather known as buckskin, glove leather, chamois leather, etc., are prepared? I mean as to the general process employed irrespective of the details,
124 and especially whether they are rawhide leather or whether they are tanned in the process of manufacture.

Ans. They are prepared in oils.

Int. 37. Whether or not they are fulled and stuffed and whether they are rawhide.

Ans. They are fulled and stuffed with oil. If there is any tanning in oil, they are tanned; if there is not, they are not tanned.

Int. 38. How long have these classes of leather been prepared in this way, if you know?

Ans. Over thirty years.

Int. 39. And whether they have during that period been an article of commerce.

Ans. They have.

Int. 40. If you were told that a good article of rawhide leather could not be made without the use of tar in the stuffing compound, what should you say—that that was a correct statement or not?

Ans. I should say it was not.

Int. 41. As a matter of fact, do you know from your own knowledge and experience whether or not a good article of rawhide can be made without the use of tar?

Ans. I do know that it can be.

Int. 42. Have you at any time while at Davis's known of the use of rosin in preparing leather; and, if so, how early did you know of such use?

Ans. I knew it twenty-five or twenty-six years ago.

Int. 43. And how as to the use of bees-wax?

Ans. They used that.

Int. 44. State whether or not the rosin and bees-wax were used at the time referred to as a part of a stuffing compound; and, if so, state what other ingredients were used therewith.

Ans. Yes; they were, and also tallow and oil.

Int. 45. Do you know Mr. William Coupe, one of the defendants in this case?

Ans. Yes, sir.

Int. 46. Has he worked at Davis's at any time while you have been there?

Ans. Yes, sir.

125 Int. 47. Did you ever know of rats and mice attacking the rawhide leather made at Davis's, as you have testified, in 1862 and 1863, and which, as I understand, was made without any tar, or did you ever hear of any complaint to that effect?

Ans. No, sir; I did not.

Int. 48. Did you ever know or hear any complaint as to that rawhide leather moulding or decaying?

Ans. No, sir.

(Cross-examination waived.)

DAVID McKELVEY.

Attest: ISAAC H. SOUTHWICK, JR.,
Special Examiner.

Deposition of Lemuel Higbee.

Direct examination by WILMARTH THURSTON, Esq., of counsel for defendants:

BOSTON, *May* 28, 1887.

Int. 1. State your name, age, residence, and occupation.

Ans. Lemuel Higbee; seventy-two years; Salem, Mass.; leather dealer in Boston.

Int. 2. How long have you been engaged in the leather business?

Ans. Over fifty years. I commenced in 1835.

Int. 3. State generally what has been your connection with the leather business from 1835 on.

Ans. Manufacturing hides into leather and selling the leather as a commission merchant.

Int. 4. You say you are now a leather dealer in Boston. How long have you had a place of business in Boston?

Ans. Nearly forty years.

Int. 5. Whether or not during that time you have been a dealer in leather in Boston.

Ans. Yes.

126 Int. 6. What kinds of leather have you been accustomed to deal in?

Ans. Wax and kip leather.

Int. 7. Please state whether or not during the time you have been in business, dealing in leather, you have handled or sold any leather in which tar has been used in preparing it.

Ans. Yes; I have.

Int. 8. Please state briefly the circumstances under which you came to handle leather of the character referred to.

Ans. Being acquainted with Mr. Pierce, who lived in Salem, where I live, he came into my store in Boston with a calfskin prepared with tar stuffing. I was so much pleased with it that I went to Mr. Frost, whom I was selling leather for, and advised him to use it; I thought so well of it. He bought tar stuffing that came from the West and used it in his leather, and continued to use it for some years.

Int. 9. Do you remember the full name of the Mr. Pierce you refer to?

Ans. Samuel S. Pierce.

Int. 10. When was it, if you remember, that Mr. Pierce came into your store with a calfskin prepared with tar stuffing, as you have stated?

Ans. In 1867; late in the summer, I think; it was warm weather, I know; July or August, I think. We were on Pearl street.

Int. 11. Have you any books to refer to that would enable you to fix the exact date?

Ans. Our books were all burned in the great fire. We have none.

Int. 12. You say you went to a Mr. Frost, whom you were selling leather for. What is the full name of the Mr. Frost you refer to, and what was his business at that time?

Ans. John Frost; tanner and currier in Peabody, Mass. It was "South Danvers" then; it is called Peabody now.

Int. 13. You say that you thought well of the calfskin that was exhibited to you by Mr. Pierce prepared with tar stuffing. What was there about the leather that you liked?

127 Ans. It made the leather very plump, soft, and excellent leather.

Int. 14. Do you remember whether Mr. Pierce claimed to have any patent in the tar stuffing with which the calfskin was prepared?

Ans. He told me that he bought the patent, Andrews' patent, of Milwaukee, I believe. He spoke of him as "old man Andrews."

Int. 15. You say that you advised Mr. Frost to use this tar stuffing, and that he bought tar stuffing that came from the West and

used it on his leather. When, with reference to the visit of Mr. Pierce, if you remember, did Mr. Frost begin to purchase and use this tar stuffing?

Ans. Within two days. Mr. Pierce went right down and took his order.

Int. 16. Do you know of what this tar stuffing was composed that was used by Mr. Frost at the time referred to?

Ans. Tar and tallow—beef tallow is all that I ever knew.

Int. 17. Did Mr. Frost manufacture large or small quantities of this leather?

Ans. He used it on all the leather that he manufactured.

Int. 18. Whether or not the leather so made by Mr. Frost at the time referred to was put upon the market and sold.

Ans. I sold all Mr. Frost's leather that he manufactured at that time.

Int. 19. About what quantity of leather, as near as you remember, was Mr. Frost manufacturing at that time?

Ans. I should say about two hundred hides a week.

Int. 20. Do you remember whether any other parties, at or about the time referred to, prepared leather with this tar stuffing?

Ans. Several others; Thomas E. Proctor, Pinder & Winchester, Brown & Caller, Tim. O'Shea, and others, all of Peabody.

Int. 21. Did you, at that time, sell the leather prepared with this tar stuffing, manufactured by any of these other parties; and, if so, which ones?

Ans. All the others, except Mr. Proctor. Mr. Proctor sells his own leather.

128 Int. 22. What was the character of the leather manufactured by these parties with the tar stuffing?

Ans. Well, as I said before, it was plump, pliable, and excellent leather. Every one that we sold it to liked it.

Int. 23. What kind of leather was it that was manufactured by these parties with tar stuffing at that time?

Ans. Wax and kip leather.

Int. 24. Whether this wax and kip leather was tanned or not.

Ans. It was tanned.

Int. 25. Did you ever know of the use of tar on leather prior to the time referred to? And, if so, state what you know about it.

Ans. I did. When I was a boy, about thirteen years old, I worked in a tan yard where they made leather. We used to melt tallow and tar together over a fire, and when it was cool we put it onto our boots to keep the water out, for the tan yard was always wet. We always did that, and it was done at the other tanneries in Salem and Peabody.

Int. 26. What effect did this tar and tallow have upon your boots beside serving to keep the water out?

Ans. It made the boots soft and kept the leather from breaking.

Int. 27. Whether or not it was well known, prior to 1867, that the effect of the use of tar on leather was to keep it soft and pliable and render it waterproof.

Ans. It was well known some time before that.

(Cross-examination waived.)

LEMUEL HIGBEE.

Attest: H. C. MERWIN,
Special Examiner.

Deposition of W. F. Wiley.

Direct examination by WILMARTH H. THURSTON, Esq., of counsel for defendants:

Int. 1. State your name, age, residence, and occupation.

Ans. William F. Wiley; forty-nine years; Peabody, Mass.; tanner and currier.

129 Int. 2. How long have you been a tanner and currier?

Ans. Thirty years.

Int. 3. Have you heard the testimony just given by Mr. Lemuel Higbee relative to the use of a stuffing composed of tallow and tar in the preparation of leather?

Ans. I have.

Int. 4. Will you please state, in narrative form, it having been agreed by counsel that you may do so, what you know, if anything, about the use of a tar stuffing in the preparation of leather?

Ans. At the time we started using tar stuffing I was foreman for Pinder & Winchester in Peabody. It was the fall of 1867 or the spring of 1868. An agent—as we supposed him to be—named Pierce came there for us to use tar and tallow—what he called a tar stuffing. He had some pieces of leather that had been manufactured with this stuffing. The appearance of that leather induced Pinder & Winchester to try the stuffing. We commenced to use it on certain kinds of stock, and we continued to use it through that season. We liked the leather so well we were induced to prepare some for the New England fair, held in September, 1868. We have a diploma for the same. In the spring of 1869 we commenced to manufacture it ourselves, in connection with Pierce and Johnson. Prior to that time we bought it from the West—I think from Milwaukee. My impression is that Higbee & Foster sold Pinder & Winchester's leather at that time, and that this leather manufactured with tar stuffing was sent to them to be sold. The stuffing made the leather plump, soft, and waterproof. We used it both ways—stuffing by hand and by mill or wheel. We put the leather and stuffing into a hot revolving wheel, which forced the grease into the leather. We used it on boot and brogan leather. It was tanned leather. My impression is that the stuffing was done under the Andrews patent. I think the old man—Andrews—came there that winter himself. This tar stuffing was used by several firms in Peabody at that time—Tim. O'Shea, Brown & Caller. That is all that I recollect of using it. I have the diploma referred to here.

(It is agreed that the diploma referred to, granted to Pinder &

Winchester, which is framed and bears date Sept. 4, 1868,
130 may be marked (H. C. M., May 28, 1887) by the examiner for identification and may be used as an exhibit at the hearing, if it shall be so desired, the diploma to remain, in the meantime, in the possession of its owner.)

(Cross-examination waived.)

W. F. WILEY.

Attest: H. C. MERWIN,
Special Examiner.

Deposition of Samuel A. Johnson.

Direct examination by WILMARTH H. THURSTON, Esq., of counsel for defendants:

Int. 1. State your name, age, residence, and occupation.

Ans. Samuel A. Johnson; thirty-nine years; Salem, Mass.; lawyer and deputy sheriff.

Int. 2. Have you heard the testimony of the two previous witnesses, Mr. Higbee and Mr. Wiley, in relation to the use of a tar stuffing in the preparation of leather?

Ans. I have.

Int. 3. They have each referred to a Mr. Pierce, whom they understood to be an agent for some party or parties, and also to some Andrews patent, and Mr. Wiley, I believe, spoke of Pierce and Johnson. Will you now please state, in narrative form, it having been agreed by counsel that you may do so, what you know, if anything, about the Andrews patent referred to and about the Mr. Pierce referred to, and also about Pierce and Johnson, so far as relates to the manufacture or use of a tar stuffing for leather?

Ans. The Johnson referred to by Mr. Wiley was Samuel S. Johnson, of Salem, Mass., my father, who is now dead. The Pierce was S. S. Pierce, then of said Salem, now of Waukegan, Illinois. They were part owners of the Andrews patent for tar stuffing. In September, 1869, I accompanied them from Chicago, Ill., to said Salem, and, under their direction, assisted in the manufacture of tar stuffing for leather. On account of the failure of my eyesight I was unable to continue my studies in the attorney's office in which I had been studying law. The place of manufacture was Pinder &
131 Winchester's tannery, in Peabody, Mass., in a shed adjoining the currier's shop. I continued in the manufacture of said stuffing until some time in January of the following year, when I resumed my law studies. My brother, who had assisted me in the manufacture of stuffing, continued to manufacture the same, under the direction of Pierce and Johnson, at said Pinder & Winchester's. Some time after my father and brother hired the old rubber factory in Beverly, Mass., and continued to manufacture the stuffing, and also an oil prepared from said stuffing and palm oil for dressing leather. I was there frequently and saw the stuffing manufactured. The stuffing made at Peabody was prepared from beef tallow and pine tar, the tallow being heated to a high temperature, if my mem-

ory serves me right, from 185° to 190° F. or upwards. It was then poured upon the tar and thoroughly mixed and then boiled together. The stuffing made while I was engaged in the manufacture of the same was used by Pinder & Winchester and others in Peabody. I understood at the time that prior to the manufacture of the stuffing at Pinder & Winchester's it had been made in Milwaukee by Andrews and shipped East.

(Cross-examination waived.)

SAMUEL A. JOHNSON.

Attest: H. C. MERVIN,
Special Examiner.

Deposition of John O'Shea.

Direct examination by WILMARTH H. THURSTON, Esq., of counsel for defendants:

Int. 1. State your name, age, residence, and occupation.

Ans. John O'Shea; forty-one years old; Salem, Mass.; tanner and currier.

Int. 2. Have you heard the testimony of Mr. Higbee, Mr. Wiley, and Mr. Johnson, who have just testified relative to a tar stuffing and the use of the same in the preparation of leather?

Ans. I have.

Int. 3. Will you please state, in narrative form, it having
132 been agreed by counsel that you may do so, what you know about the use of such tar stuffing in the preparation of leather?

Ans. I was foreman for my father, Mr. Timothy O'Shea, who has been referred to by the other witnesses, and who is now dead. Mr. Lemuel Higbee, who has just testified, and to whom my father was selling leather at that time, came in and advised us to use tar stuffing. He told us that other firms, neighbors of ours, were going to use it, and we did order some and used it and continued to use it for a number of years. We applied it in a stuffing wheel. It came from the West at first. After they made it at Pinder & Winchester's we got it from there. We began to use it at the same time that the others did. We used it on tanned leather. Our tannery was in Peabody.

(Cross-examination waived.)

JOHN O'SHEA.

Attest: H. MERWIN,
Special Examiner.

Deposition of George J. Winchester.

Direct examination by WILMARTH H. THURSTON, Esq., of counsel for defendants:

Int. 1. State your name, age, residence, and occupation.

Ans. George J. Winchester; fifty-eight; Peabody, Mass.; leather manufacturer. I have been in the leather business forty-two years.

Int. 2. Have you heard the testimony of Mr. Higbee, Mr. Wiley, Mr. Johnson, and Mr. O'Shea, who have previously testified relative to a tar stuffing and the use of the same in the preparation of leather?

Ans. I have.

Int. 3. Will you please state, in narrative form, it having been agreed by counsel that you may do so, what you know about the use of such tar stuffing in the preparation of leather?

Ans. In the fall of 1867 I was connected with John Pinder, of Peabody, in the business of manufacturing leather; the firm was called Pinder & Winchester. Some time in the fall of 1867
133 Mr. Samuel Pierce called upon us with some leather, which he claimed was made with a tar stuffing, and wanted us to introduce it into our factory. We liked the appearance of the leather very much, and told him that he could go into the shop and talk with our foreman, whose name was William Wiley, and we would make arrangements to try some of it there. We made the arrangements and he sent West—I think to Milwaukee—and had some of this tar stuffing sent at once. We commenced experimenting with it at once and used a great deal of it, and have used it more or less up to the present time. When I said experimenting I meant that it was a new thing to us and we commenced trying it. We adopted it right off and used it with certain grades of our leather, both of wax and kip. The leather that we made with this tar stuffing was sent to Boston and sold by Higbee & Foster. Mr. Higbee, of Higbee & Foster, was the gentleman who testified here. In the fall of 1868 Mr. Wiley finished up a few sides of this leather and sent to the fair as a sample of tar-stuffed leather, and we received a diploma for that leather. The diploma referred to in the testimony of Mr. Wiley and at that time marked for identification is the diploma which we received, and has been hanging in our office ever since that time. I see that the diploma is dated Sept. 4. The leather was finished some two or three weeks before it was sent. We used the tar stuffing both by what we called hand and wheel stuffing; mostly by the wheel. The tar stuffing was made of tar and tallow. After we had used this tar stuffing some months we found that we were using so much of it that we thought it would be much cheaper for us to make it ourselves, so we bought a large jacket kettle and commenced to manufacture it, and did so for a long while. The tar stuffing made our leather much plumper and softer, and we considered it much more waterproof. Pierce and Johnson claimed that they bought the right of a Mr. Andrews. They always spoke of it as old Andrews's patent. Pierce and Johnson oversaw the manufacture of the tar stuffing when it was made at our place. They not only made the stuffing that we used, but used to make for other parties. This tar stuffing was used by other parties in Peabody at the same time that we used it. Mr. John Frost used it; Mr.
134 Timothy O'Shea, Thomas E. Proctor, Brown & Caller. The leather that we used the tar stuffing on was all tanned.

Int. 4. Did you ever know of the use of tar or a tar stuffing on leather prior to the time Mr. Pierce came to your place and you

began to buy and use tar stuffing, as you have testified, in the fall of 1867?

Ans. Yes, sir; we used to use it when I was a boy and worked in the tan yard to stuff our boots with to keep out the water and to keep the leather soft.

(Cross-examination waived.)

GEORGE J. WINCHESTER.

Attest: JOHN W. MASON,
Special Examiner.

Deposition of Joseph A. Miller.

Present: James H. Morrison, of counsel for complainants; Wilmarth H. Thurston, of counsel for defendants.

Direct examination by WILMARTH H. THURSTON, Esq., of counsel for defendants:

WEDNESDAY, *Aug.* 3, 1887.

Int. 1. What is your name, age, residence, and occupation?

Ans. Joseph A. Miller; age, fifty-eight; Providence, R. I.; civil and consulting engineer, solicitor of patents.

Int. 2. Please state what experience you have had to qualify you to testify as an expert in patent cases, and whether or not you have been accustomed to examine and compare letters patent and the inventories set forth therein, and to give testimony in the courts relating thereto.

Ans. I received a technical education in Germany; had charge, as director and manager, of sugar refineries, machine shops, and print works; have been employed in constructing and operating of railroads, and for the last twenty years have been acting as solicitor of patents and prosecuting applications for inventions before
135 the Patent Office, and I have during all this time investigated and compared patents with each other and with the state of the art, and have been frequently called upon to testify in the courts in patent cases.

Int. 3. Please state whether or not in the course of your experience you have had to investigate and familiarize yourself with the art of preparing and manufacturing leather, and whether you are familiar with the processes and methods employed in that art.

Ans. I have been from my earliest youth familiar with the art of leather-manufacturing, as several of my nearest relatives were engaged in the manufacture of leather and had their works located in close proximity to my father's manufacturing establishment. I was also from 1850 to 1854 interested in the construction of leather-splitting machines, and was frequently called upon to compare leather produced by various processes with reference to the use of this splitting machine, and I have also investigated the art for the purpose of testifying in several cases before the courts in suits referring to machinery and apparatus used in the manufacture of leather.

Int. 4. The patent upon which this suit is based is the letters patent granted to Herman Royer, No. 149,954, dated April 21, 1874, for an "improvement in the modes of preparing rawhides for belting." Please look at a copy of said patent, which I now show you, and state whether you have examined and understand the same and what is therein set forth and described.

Ans. I have examined the patent handed to me, and I understand the same and what is therein described.

Int. 5. Please state what you understand to be the subject of said patent and what you understand to be the alleged invention set forth therein and specified in the claim.

Ans. The patent is for an improved mode or process for preparing rawhide for belting. The claim, "the treatment of the prepared rawhide in the manner and for the purpose set forth," refers to the specification to define the process and the manner in which the invention is to be carried out. Referring now to the specification, I find that this process includes, as the first step, the removal of the hair from the hides by means of sweating; it includes, as the second step, the drying of the hide until it is perfectly hard; as a third step, it includes the insertion of the hard, dried hide in water
136 for ten or fifteen minutes or "long enough to lose its extreme stiffness;" as a fourth step, it includes the fulling or softening of the hide by some mechanical means; as a fifth step, it includes the spreading upon the hide, in a warm, liquid state, of "a mixture of twenty parts tallow, two parts wood tar, and one part rosin;" as a sixth step, it includes the fulling or stuffing of this mixture into the hide in a suitable machine; as a seventh step, it includes the moistening of the hide with water four or five times during the day; as the eighth step, it includes the stretching of the hides "the next day" and cutting into pieces suitable for belting. The inventor points out particularly in his specification that no lime, acid, or alkali is to be used in his process, and says:

"In order to more fully understand my mode of preparing hides, I avoid the use of lime, acid, or alkali, for just to the amount a hide is impregnated with such substances it suffers in its tensile strength and toughness; a slow but constant dissolution is going on with hides so impregnated. If the effects of the aforesaid substances are in some way neutralized, which must be a chemical one, the hide suffers again in this process. The power to resist abrasion and the extreme tensile strength for which pure rawhide is noted are irreparably lost."

From this it is evident that in the process described in this patent and claimed in the claim the use of lime, acid, or alkali must be avoided to secure the advantages claimed for this improved mode or process. The inventor in his specification says:

"I am aware that hides and skins have been prepared by a fulling and bending operation to render them pliable, but this mode also does not answer for the preparation of machine belts and lacing. It is necessary to make use of a preparation substantially as before described to render the rawhide fit for use and durable."

This disclaimer in the specification makes it evident that each

successive step described as making up the whole process is necessary in carrying out this invention, and, further, that the mixture of tallow, wood tar, and rosin in the fifth step is essential to the success of the invention, for the inventor particularly calls attention to them in his specification in the following language:

"The tallow has the effect of imparting a high degree of
137 elasticity and helps the moisture. The wood tar prevents dogs, cats, mice, vermin, etc., from attacking the hide, at the same time causing the tallow to enter the hide quickly and thoroughly. The rosin gives the belt a certain solidity and glossy appearance, and assists also in preventing animals and vermin from attacking the belting."

Summing up, therefore, the invention as it is described and claimed in the patent before me, it is, first and foremost, essential that the hide to be prepared shall be at no time subjected to a treatment of lime, acid, or alkali; that the hair must be removed by a process of sweating; that after the hair is removed the hide must be dried perfectly hard; that the hard, dried hide must be immersed in water long enough to lose its extreme stiffness; that the hide must now be softened or fulled by mechanical means; that after this softening or fulling the hides must be covered by a mixture of twenty parts tallow, two parts wood tar, and one part rosin, applied in a warm, liquid state; that, next, this mixture must be fulled or stuffed into the hide in a suitable machine; that when removed from the machine the stuffed and fulled hide must be moistened several times during the day, and the next day stretched and cut into belting. Each one of these successive steps is essential and necessary to carry out the invention, and they all, in the succession set forth, form the mode, process, or treatment referred to in the claim.

Int. 6. You say that the process which forms the subject of the Royer patent in suit is made up of a series of steps, each of which, in the order named, is essential and necessary to carry out the invention recited in the patent. Please examine a copy of the file-wrapper and contents pertaining to the application for the said Royer patent and showing the proceedings which took place in the procurement thereof and state whether you find anything therein which confirms the conclusion at which you have arrived from an examination of the patent on its face; and, if so, please point it out.

Ans. I have examined the contents of the file-wrapper and find, first, that the original specification referred to an "improved process for preparing leather," which was subsequently changed into "improvement in the treatment of rawhide." I find that a portion of the original specification has been erased, to wit, "the process
138 above described has no such effect. The process of making leather upon a sole mechanical principle is not new; it is essentially the mode of the Indians and other barbarous nations, but the stuffing with the above-named substances is new and originates with myself. The stuffing with the mixture first makes the leather perfect." I also find that the original application was not for a process or mode of preparing rawhide for belting, but, as it

was set forth in the claim for said application, for "the use of a mixture of wood tar, rosin, and tallow applied to hides made into leather by a mechanical process, substantially as and for the purpose herein set forth." I find that on Jan. 4, 1873, the application was rejected, with the following remarks: "The combination of ingredients set forth in the application above cited is found to have been applied to leather for similar purpose, as shown in patent to C. G. Prand, of April 25, 1848; also rejected application of S. R. Bissel, filed Dec. 7, 1867; patent refused."

I find, further, that the application was amended June 10, 1873; that the original claim was erased and two claims were substituted for the same, viz., "first, the mode herein specified of preparing rawhides for machine belts, lacings, or ropes by the fulling and bending operation and the preserving mixture, as substantially set forth; second, a belt or rope of rawhide prepared in the manner and with the materials specified as a new article of manufacture." This amendment changes the nature of the invention. The first claim presented was for the "use of a mixture of wood tar, rosin, and tallow applied to hides made into leather by a mechanical process." The amended claims are for a mode of preparing rawhides by the fulling and bending operation and the preserving mixture, as set forth in the first claim, whilst the second claim is for the product of the mode or process set forth in the first claim. In rejecting the so amended application the Patent Office, in the letter dated June 16, 1873, says: "Upon further consideration of the matter above cited, in connection with amendment of the 11th instant, it is apparent that the only feature of novelty presented not embraced in applicant's original patent granted May 12, 1868, is the addition of 'tar, rosin,' as ingredients to the compound for preserving leather.

In addition to references cited in official letter of Jan. 4, 1873,
139 patent to Joshua Miller for 'compound for stuffing leather,' granted March 8, 1870, will be found to embrace the ingredients for which protection is sought in this application. The use of such compound in the manufacturing process would not leave a distinguishable feature in the article when placed in the market. A patent is refused." On Oct. 9, 1873, the attorney of record in this application addressed a letter to the Commissioner of Patents, in which he states that he is in receipt of an extended account of the improvements made by Mr. Royer, and that the same is aggrieved at the rejection of his application. In asking for a reconsideration of the pending application, he states: "The use of tallow and tar upon leather are admitted to be old; but rawhide fulled is not leather, and these materials act with the fulled rawhide very different to what they do with leather, and the rawhide fulled and prepared with such material is superior to that prepared under his former patent."

In the same letter the attorney requests that the second claim—namely, the claim for the product—be struck out. On Oct. 17, 1873, the Patent Office acted on the thus amended application as follows: "In response to attorney's letter of the 6th instant, in the application above cited, applicant is informed that a claim for the treat-

ment of 'rawhide' in manner, etc., as described, independent of the process at present included, for which protection has already been granted, might receive favorable consideration. It is proper to add that the body of the specification should be amended with a view to presenting a claim of the character referred to." On the twenty-ninth day of October, 1873, applicant amended his specification as follows:

"1. Erase title and insert 'improvement in the treatment of raw hide.'

"2. Also erase 'the action produces what is termed leather,' page 1, lines 23 and 24.

"3. Page 1, line 15, erase 'with' and insert 'this may be done in a.'

"4. Insert 'fulling this portion' instead of 'also converting this part into leather,' page 2, lines 3 and 4.

140 "5. Insert 'ready for the next operation' instead of 'is thoroughly formed into leather,' page 2, line 15.

"6. Insert 'preparing hides' instead of 'making leather,' page 5, lines 4 and 5.

"7. Insert 'belting' instead of 'leather,' page 4, lines 15 and 19.

"8. Insert 'hide' instead of 'leather,' page 4, line 21.

"9. By erasing the claim and inserting 'I claim as my invention the treatment of the prepared rawhide in the manner and for the purpose set forth.'"

With these various amendments the application for a patent, as originally filed, was entirely changed in that, whilst the original application was for the use of a mixture of wood tar, rosin, and tallow applied to hides made into leather by a mechanical process, the amended application carefully avoids all mention of the word "leather," and confines and limits the invention to the treatment of rawhide by the successive steps which form the process described in — specification. The Patent Office now insisted on the erasure from the specification of the portion referring to the operation of a machine protected by another patent, after which action the patent, with this narrow and limited claim, was allowed.

The examination of the file-wrapper and contents of the application of Herman Royer for improvement in the mode of preparing rawhides for belting clearly supports the conclusions I at first arrived at by reading the specification of the patent as granted I find that Royer first applied for the use of a mixture of wood tar, rosin, and tallow applied to hides made into leather by a mechanical process. I find that when it was shown to him that the same mixture had been applied to leather for similar purpose by C. G. Brand in 1848, he changed his claims by erasing the same and inserting one claim for the mode of preparing rawhides by the fulling and bending operation and the preserving mixture, and the second claim for the product. Referred now to his own prior patent, he withdraws these claims, rewrites his specification, and accepts at last a claim for the treatment or process, step by step, exactly as is set forth in the specification for the patent granted.

From the examination of the file-wrapper and contents, it is evi-

dent that the preparation of rawhide by mechanical means
141 was old before the application of Royer. It is also evident and admitted that the preparation of hides by the use of lime, acid, or alkali was old; and it is further evident and admitted that the use of a mixture of wood tar, rosin, and tallow on hides or leather was old. The withdrawing of the second claim, filed on June 10, 1873—"a belt or rope of rawhide prepared in the manner and with the materials specified as a new article of manufacture"—is an admission that the examiner was correct when he stated that "the use of such compound in the manufacturing process would not leave a distinguishable feature in the article when placed in the market," and that therefore Royer did not describe in his application under consideration any new article of manufacture. The fulling and bending operation being old, the mixture used for stuffing the hide also being old, the corresponding virtues or effects are old. The tallow has always had the effect of imparting a high degree of elasticity to the hide; the wood tar always did prevent dogs, cats, mice, vermin, etc., from attacking the hide, and at the same time did cause the tallow to enter the hide quickly and thoroughly, and rosin always did give a certain solidity and glossy appearance to the leather, and from its very nature did prevent animals and vermin from attacking the same. In my opinion, therefore, the claim of the patent refers to the eight successive steps forming the mode or process as patented to Royer. The claim of the patent differs from the first claim of the amendment of June 10, 1872, namely, the mode herein specified of preparing rawhides for machine belts, lacings, or ropes by the fulling or bending operation and the preserving mixture, substantially as set forth; for whilst this claim limited the invention to the fulling and bending operation and the preserving mixture (both of which were old, and the claim was therefore rightfully rejected), the claim in the patent can only be construed and the patent saved by further limitation, namely, to the eight successive steps described in the patent as forming the mode of preparing rawhide for belting.

(Copy of the file-wrapper and contents of the Royer patent in suit, referred to by the witness, is put in evidence by counsel for defendants, and the same is marked "Defendants' Exhibit Royer File-Wrapper, I. H. S., Jr., sp'l ex'r."

142 It is stipulated and agreed that the copy of the file-wrapper introduced may be used for all the purposes of evidence in this case with the same force and effect as though duly certified.)

Int. 7. You have stated that it appears from the file-wrapper of the Royer patent that during the progress of the application the applicant was referred to a prior patent granted to him May 12, 1868. I show you a copy of a patent of that date, No. 77920, granted to Herman Royer and one Louis Royer, and also a copy of another patent granted to Herman Royer, dated June 22, 1869, No. 91772, both of which are already in evidence in this case as Defendants' Exhibit Royer 1868 Patent and Defendants' Exhibit Royer 1869 Patent. Please examine each of said patents and state what you

find disclosed therein with reference to any process or method for treating rawhides.

Ans. I find that letters patent 77920, May 12, 1868, is for an "improved machine for treating hides." I find in this specification: "The nature of our invention is to provide an improved machine for converting rawhides into leather of that class which is used for belting, lacing, and other purposes where it is necessary to preserve the native strength and toughness without destroying or impairing the natural fibres or grain of the leather." The operation of the machine described consists in securing the hide, previously deprived of the hair, to a vertical shaft placed within a cylindrical cage, which shaft, with the so attached hides, is first turned in one and afterwards in the opposite direction, thus fulling or softening the hides, after which the inventor states that "the hide so operated upon is treated with oil and tallow in the usual way." The patent therefore describes a process for treating hides which consists in fulling and softening the hide by mechanical means, and then treating the so prepared hide with oil and tallow by forcing or stuffing the oil and tallow into the hide by mechanical means, which is the usual way.

Patent No. 91772, of June 22, 1869, also describes a process for softening or fulling hides by mechanical means and then treating the same with oil or tallow in the usual way—that is, by forcing the oil and tallow into the hide by mechanical means.

(Adjourned.)

143 THURSDAY, *Aug.* 4, 1887.

Int. 8. Referring back to the file-wrapper of the Royer patent in suit, and particularly to the first claim of the amendment of June 10, 1873, please state how the method or mode of preparing rawhides specified in said claim differs, if at all, from the method or process disclosed in the prior Royer patents referred to in your last answer.

Ans. The method or process set forth in the first claim of the amendment does not differ from the method or process disclosed in the prior Royer patents. All refer to a fulling or bending operation of the rawhide and the introduction into the hide of a preserving mixture by mechanical means. Reading this first claim in the amendment of June 10, 1873, by the light thrown upon it by the specification, the preserving mixture referred to in the claim consists of tallow, wood tar, and rosin, whereas the preserving mixture referred to in the prior patents of Royer is oil and tallow. As it is admitted by Royer that the mixture of tallow, wood tar, and rosin is old, and had been, previous to the invention of Royer, applied to leather for the same purpose, the substitution of this old and well-known mixture for the oil and tallow does not, in my opinion, constitute invention, and certainly does not in any way change the mode or process previously disclosed in the prior Royer patents.

Int. 9. You have stated that you find the Royer patent in suit to be for a process composed of the series of steps described in the specification, and that your conclusion as to this is confirmed by the

proceedings which took place in the procurement of the patent. Please state whether you find any further confirmation for your conclusion from what is contained in the prior Royer patents.

Ans. I do. The prior Royer patents describe a process for preparing rawhide, which consists in first unhairing the hide, for it is stated "the hide to be treated after it has been deprived of its hair" in a dry and rough state is subjected to mechanical action, to full and soften the hide, and then treated with the preserving mixture in the usual way—that is, by forcing the preserving mixture into the hide by mechanical means. In view of this disclosure in the prior Royer patents the action of the examiner was correct
144 and proper when he rejected the first claim of the amendment of June 10, 1873, and limited the patent of Royer to the successive steps set forth in the Royer application, which differs from the processes described in the prior Royer patents in the step of removing the hair from the hide by means of sweating; to which step particular attention is called all through the specification as being necessary and important. There are other minor steps described as essential in carrying out the process or treatment of rawhide in the Royer patent in suit which are not described in the prior Royer patents, among which are the third step, of inserting the hide for ten or fifteen minutes in water; the fifth step, which consists in spreading with a brush the preserving mixture in a warm, liquid state upon the hide; also the seventh step, of moistening with water four or five times during the day the prepared stuffed hide. It is apparent from the specification that in carrying out the process of Royer the hides must be kept in this moistened state until the next following day, when, as he states, the hide is stretched and cut into suitable pieces for belting. When the hide so prepared is in part or whole to be used for lacing a ninth and tenth step is required, namely, ninth, the shaving and oiling of the hide, and, tenth, the perfect drying of the same, described in the Royer patent as follows: "For the purposes of lacing the thinnest hides are selected, and after they have gone through the same mode of treatment as hides for belting they are shaved, oiled, and hung up to get perfectly dry, when the hide is cut into strings." It is evident that, to distinguish the process described in the Royer patent in suit from the process or method described in the prior Royer patents, it must be limited to the successive steps referred to in the specification describing the process or mode of preparing rawhide made the subject of the claim.

Int. 10. You say that one difference between the process described in the Royer patent in suit and the process disclosed in the prior Royer patents is the step of removing the hair by means of sweating, and that particular attention is called to this step all through the specification as being necessary and important. Please look at the letters patent which I now show you (being a copy of the letters patent granted to John A. J. Shultz, No. 187,492, dated Feb. 20, 1877), of later date than the Royer patent in suit, and
145 state whether you find anything therein that indicates that the Patent Office, in granting the Royer patent in suit, intended to limit it to a process which includes the removal of the

hair by sweating as one of its steps, and that the office understood that the patent issued to Royer was thus limited.

Ans. I have examined the Shultz patent referred to, and find that the difference between the process described therein for manufacturing fulled rawhide and the process described in the Royer patent in suit consists essentially in subjecting the hide to the liming process, which Royer claims is so injurious to the hide, for Royer says: "I avoid the use of lime, acid, or alkali; for just to the amount a hide is impregnated with such substances it suffers in its tensile strength and toughness. A slow but constant dissolution is going on with hides so impregnated. If the effects of the aforesaid substances are in some way neutralized, which must be a chemical one, the hide suffers again in this process." Now, Shultz in his specification describing his improved process does exactly what Royer says must be avoided in his process, and Shultz describes it as follows: "I first soak the hides in clear water, as usual. They are then soaked in lime water and unhaired; they are then bated, and, if the product is intended for lacing, very thoroughly, but if intended for belting they are bated but little, and preferably in cold water. I then preferably dip the hides in a weak solution of alum and sulphuric acid (which aids in more thoroughly neutralizing the lime and foreign substances that may be present)." The claim allowed in the Shultz patent also clearly indicates that the Royer patent was intended by the Patent Office to be limited to the successive steps, one of which was the removal of the hair from the hide by sweating and the preparation of the hides without the use of lime, acid, or alkali in any of the steps forming the process; for it secures to Shultz "the improved process in preparing fulled rawhide, consisting of liming, bating, and drying the hides, and then fulling and stuffing them, all as set forth." The investigation of this Shultz patent confirms me still more strongly in the opinion I have at first expressed, that the Royer patent in suit must be confined to the successive steps referred to by me in answer to

146 Int. 5, for it is only by considering the Royer patent as so limited that the Patent Office could have granted the claim in the Shultz patent.

(Defendants' counsel puts in evidence a copy of the Shultz patent, No. 187,492, referred to, and the same is marked "Defendants' Exhibit Shultz Patent, I. H. S., Jr., sp'l ex'r.")

Int. 11. It appears from the specification of the Royer patent in suit that in carrying out the process therein described the hide, after the hair has been removed by means of sweating, and after it has been dried perfectly hard and afterwards inserted in water for ten or fifteen minutes, is subjected to the fulling operation before any of the stuffing mixture is applied to it. Please state whether this step in the process has any special applicability or utility or is especially needful in the case of a hide which has had its hair removed by means of sweating, as required by the Royer patent.

Ans. This preparatory softening and breaking of the hide prepared as described in the Royer patent in suit, where the hair is

removed by the process of sweating, is essential and necessary, for when a hide has its hair removed by sweating and such hide has not been subjected to the liming process the hide contains considerable fatty and albuminous matter, which, when the hide is dried hard, completely covers the surface and the spaces between the tissues with a hard, glutinous substance, through which it is very difficult to force the stuffing or preserving mixture, and it becomes necessary to break up this hard substance by mechanical means before the stuffing can be worked into the hide. This is the essential difference between a hide prepared by the sweating process and a hide prepared by the liming process, for in the liming process the fatty and albuminous matter adhering to the hide and filling the spaces between the tissues is so softened that in the subsequent washing or bating these impurities are removed and the hide is in a much better condition to receive the stuffing mixture. Therefore, hides prepared by the liming process do not require the first operation of fulling, breaking, or softening, but can receive at once the stuffing or preserving mixture and have the same forced into the hide in the usual way by mechanical means.

Int. 12. You have referred to the fact that the file-wrapper of the Royer patent discloses that the application as originally filed
147 set forth that the supposed invention consisted in an "improved process of preparing leather," and that this was subsequently changed by amendment to an "improvement in the treatment of rawhide," and that the word "leather" was stricken out throughout the specification; and you also referred to the fact that the applicant admitted, by his action in procuring his patent, that the use of the stuffing compound, composed of tallow, tar, and rosin, on leather, was old; but that he claimed that rawhide fulled is not leather, and that the tallow, tar, and rosin composing the stuffing compound act with the fulled rawhide very different to what they do with leather; and it seems to have been this allegation on the part of the applicant which induced the office to grant him a patent at all. What have you to say as to the statements made by Royer, as above, that rawhide fulled is not leather, and that tar, tallow, and rosin act differently on rawhide from what they do on leather?

Ans. Fulled rawhide is leather. It is the oldest method of making leather. The process of fulling rawhide has been practised all over the world at all times, and is practised to a very large extent at this time. Royer, in his patent No. 91772, dated June 22, 1869, in describing his device for treating hides, states: "My invention relates to an improved machine for converting rawhides in their dry and rough state into leather;" and in describing the operation of the machine he states: "This winding and unwinding is continued until the hide has become flexible and soft, after which it is treated with oil or tallow in the usual way;" and in the patent to Herman and Louis Royer, No. 77920, dated May 12, 1868, they state: "The nature of our invention is to provide a machine for converting rawhides into leather;" and then in the specification describe the method by which the rawhide is fulled and softened in the machine, and "then treated with oil and tallow in the usual way." It

is not only a fact that fulled rawhide is leather, but it is evident from the examination of these previous patents to Royer, as well as from the specification originally filed by Royer for the patent in suit, that Royer always considered fulled rawhide to be leather.

The effect of the stuffing compound or preserving mixture on fulled rawhide is exactly the same as on tanned or partially
148 tanned leather. The tallow on both imparts elasticity, softness, and durability to the hide. The tar prevents dogs and vermin from attacking the hide, whether the same is tanned or prepared by the fulling operation, and in both kinds of leather causes "the tallow to enter the hide quickly and thoroughly." "The rosin gives the belting a certain solidity and glossy appearance," and also "assists in preventing animals and vermin from attacking the belting," in all respects exactly the same, whether the leather is prepared by the tanning or the fulling operation. There is no agent, either chemical or mechanical, in the fulled rawhide, which combines with or in any way changes the action or effect of tallow, wood tar, or rosin, that does not also exist in the tanned hide; and the result of the use of this mixture on tanned leather, partially tanned leather, or fulled rawhide is exactly the same. The tallow on both kinds of leather acts the same and produces the same effect. The wood tar produces the same effect on both kinds of leather, and so does the rosin. It is not true, therefore, that the mixture of tallow, wood tar, and rosin acts differently on fulled rawhide than what it does on leather prepared in any other way.

Int. 13. That being so, and the application of the mixture of tallow, tar, and rosin to tanned leather being admitted to be old prior to the date of Royer's alleged invention, please state whether, in your opinion, any invention was required to apply this old mixture to another kind of leather, to wit, fulled rawhide, in place of the mixture of tallow and oil previously used.

Ans. No invention was required. The mode and process is the same, whether oil and tallow, paraffine and tallow, wood tar, tallow, and rosin, or any other well-known stuffing compound is worked into the leather by mechanical means. It is simply exchanging one well-known substance or mixture of substances for another, and requires no invention. The result of using tallow, tar, and rosin is the same on both kinds of leather.

Int. 14. You say that the effect of tar and of tallow and of rosin is the same when used on fulled rawhide leather as it is when used on tanned leather. Please state whether the effect of these several ingredients upon each of these kinds of leather is the same, whether they be used separately or together—that is to say, whether
149 or not each of the ingredients mentioned performs its office in all cases, whether used alone or in connection with one or both of the others.

Ans. The effect of the use of either one of these ingredients is the same whether used alone or in connection with one or both of the others, each performing an independent office or function. The tallow imparts elasticity and pliability to the hide when it is used on a hide that has been previously tanned or partly tanned, and it

also imparts elasticity and pliability to a hide prepared by mechanical means; the wood tar protects the hide against dogs, mice, vermin in the same manner when the hide has been prepared in the tanning or the fulling process; the wood tar also causes the tallow to enter the hide quickly and thoroughly, whether the hide has been prepared by the tanning or fulling process; the rosin gives a solid, glossy appearance to the hide when prepared by either the tanning or fulling process. Each of these ingredients acts upon the hide independent of the other, except in so far as the penetrating quality of the tar facilitates the entering of the tallow into the hide. The tar itself contains rosin, and this is particularly true of crude or heavy tar. No chemical change is produced by the combination of tallow, tar, and rosin. Each imparts its own peculiar property to the hide independent of the other.

Int. 15. Have you read the deposition of Herman Royer in this case?

Ans. I have.

Int. 16. I observe that Mr. Royer, in his deposition, has a good deal to say about the machine described in the Royer patent, No. 77920, and goes quite fully into the operation of that machine and the effects that he alleges are produced by it; and, in answer to Int. 14 of his deposition, he claims that the operation of that machine constitutes a large part of the process of the patent in suit. What have you to say as to this?

Ans. In my opinion, the machine forms no part of the process. In the specification of the patent in suit the inventor says that after the hair has been removed from the hide by sweating and the hide has been dried perfectly hard and has afterward been inserted in water long enough to lose its extreme stiffness, "in this condition the process of fulling is commenced. This may be done in a machine constructed for this purpose and patented by me May 12, 1868, under No. 77920." This language, "this may be done," leaves it optional whether the fulling process is done in this machine or in any other of the well-known machines that have been and are used for the process of fulling, as, for instance, such a machine as is described in the patent to Royer, No. 91772, June 22, 1869; and the testimony of Mr. Royer can have no other effect than that incident to his experience in the use of the machine referred to in this patent for fulling.

In the original specification of Royer's application for a patent the operation of the machine was described, but was erased from the specification on the objections made by the examiner that "this portion of the specification refers to the operation of a machine protected by another patent, and is in no way necessary to a proper elucidation of this invention or discovery."

Int. 17. Have you read the testimony of William Coupe in this case, including his deposition in the opening, when he was called as a witness by the complainant?

Ans. I have.

Int. 18. State whether you understand the method or process employed by the defendants in this case for treating or preparing

rawhide for lace-leather, as set forth in the testimony of Mr. Coupe, and particularly in his answer to Int. 4 of his deposition in the opening.

Ans. I do.

Int. 19. Please compare the method or process employed by the defendants for preparing rawhide for lace-leather with the method or process described and claimed in the Royer patent in suit, and state whether they are alike or different, and point out the resemblances or differences that you find.

Ans. The defendants' process differs from the Royer process, first, in that the hair is removed from the hide by the process of liming instead of the process of sweating; second, in that the lime and other foreign matter is removed from the hide by the process of drenching, which is not done in the Royer process; third, in that the hide is covered with the stuffing and preserving mixture in a cold, thick, pasty condition, and not in a warm, liquid state. The hide,
151 covered with the stuffing compound, is then subjected to the prccess of fulling, the same as in the Royer process. The hide is next stretched, again coated with the stuffing compound, and placed in a machine to complete the fulling; the hide is then again stretched and is then ready to be cut into lace-leather. The defendants' process differs from the Royer process, therefore, in that the first step of the Royer process (the removal of the hair from the hide by means of sweating) is not used. It differs further from the Royer process in the second step, in which the hide is not dried perfectly hard, but is dried nine-tenths dry. It again differs from the Royer process in that it does not use the third step of inserting the hide for ten or fifteen minutes in water. Under exceptional circumstances, a few hides may be softened by repeatedly dipping them into water. It again differs from the Royer process in that the fourth step (namely, the preparatory fulling of the hide without the stuffing mixture) is omitted. It differs from the Royer process again in that the sixth step is omitted (namely, the moistening of the fulled and stuffed hide four or five times during the day), and when used for lace-leather it differs from the Royer process in that the prepared hide is not hung up to get perfectly dry before it is cut into strings, as is done in the Royer process.

Comparing the whole of the two processes with each other, the broad, distinguishing feature between the two consists in that the defendants' process depends upon the action of lime in the preparation of the hide, whilst the Royer process lays particular stress upon avoiding the use of lime, acid, or alkali in the preparation of the hide.

(Adjourned.)

MONDAY, *Aug.* 8, 1887.

Present: Thomas L. Livermore, Esq., of counsel for complainant; Wilmarth H. Thurston, Esq., of counsel for defendants.

Cross-examination by THOMAS L. LIVERMORE, Esq., of counsel for complainant:

Cross-int. 20. In your answer to Int. 6 you used this language: "The tallow has always had the effect of imparting a high degree of elasticity to the hide. The wood tar always did prevent
152 dogs, cats, mice, vermin, etc., from attacking the hide, and at the same time did cause the tallow to enter the hide quickly and thoroughly, and rosin always did give a certain solidity and glossy appearance to the leather." Did you intend by this language to state that it was within your personal knowledge, prior to the date of the patent in suit, that tallow, tar, and rosin had been used in fulling hides with the effects mentioned in this passage quoted from your answer?

Ans. It was, but with this further explanation: Tallow and tar have been, to my personal knowledge, used on hides; and when so used, the rosin contained in the tar will have the effect of producing a glossy appearance on the surface of the hide. It is not in my personal knowledge that tallow, tar, and an addition of rosin have been used as a dressing or stuffing for leather.

Cross-int. 21. I call your attention to the fact that the last question was confined to hides and made no reference to leather. Do you intend to say that, prior to the date of the patent in suit, you personally knew of rawhide being fulled with a dressing of tallow and tar?

Ans. I do not.

Cross-int. 22. Did your answer to cross-int. 20 refer to the use of tallow and tar on tanned leather only?

Ans. It did.

Cross-int. 23. Where did you see that dressing used on tanned leather prior to the date of the patent in suit?

Ans. I have seen it used in Germany prior to 1850.

Cross-int. 24. Are you aware that such use in Germany, prior to the date of the invention patented in the patent in suit, cannot have any effect upon that patent?

Ans. I am.

Cross-int. 25. What do you understand the article to be which is called "prepared rawhide" in the claim of the patent in suit?

Ans. It means rawhide prepared by softening by mechanical means and preserving by forcing tallow, oil, and similar substances into the hide by mechanical means.

Cross-int. 26. You have stated in your direct examination
153 that the article described in your last answer was leather. How do you reconcile that with your statement that it is rawhide?

Ans. It is rawhide before the preserving mixture is forced into the same, when it becomes leather, just in the same way as when

rawhide has been preserved by the tanning process it becomes leather.

Cross-int. 27. Does it follow that the article called "prepared rawhide" in the claim of the patent in suit is the hide after it has been subjected to all the operations described in the patent prior to applying the preserving mixture to it?

Ans. It does not. The words "prepared rawhide" in the claim refer to rawhide prepared and treated in the manner and for the purpose set forth in the specification.

Cross-int. 28. What part of the specification leads you to this conclusion?

Ans. The whole description of the process, for it commences with the ordinary rawhide of commerce, describes the method for removing the hair, drying the hide, softening the same, the working of the preserving mixture into the hide, and the completing processes or steps by which the rawhide is prepared to make a complete, useful, and durable article.

Cross-int. 29. I call your attention to the fact that the claim does not purport to cover the whole preparation and treatment of the rawhide of commerce described in the specification, but purports to cover the treatment of what is called in the claim "the prepared rawhide." Now, do you find anything in the specification that is inconsistent with a construction of the claim which makes it cover the treatment of the rawhide after it has been subjected to all the processes described which still leave it rawhide?

Ans. In my opinion, the claim covers the process of preparing rawhide, and that the specification describes how it is to be prepared. There is nothing in the specification to indicate that the rawhide is to be prepared to a certain extent and subjected to the process described; on the contrary, the specification is very clear, and, after reciting every step of the process, it states: "The next day it is stretched and cut into pieces suitable for belting." Now, the thing that is stretched is the prepared rawhide, for the specification further states: "Belts and lacing made of such prepared hide are in all respects stronger, more lasting, and cheaper than those made from common leather." The prepared hide referred to in the quotation is the prepared rawhide referred to in the claim. And, again, the specification clearly points out what the treatment is to prepare the hide, for it states: "In order to more fully understand my mode of preparing hides I avoid the use of lime, acid, or alkali," etc. It is therefore evident that the specification and the claim refer to rawhide prepared in a peculiar manner to fit it for belting and lacing, to make it stronger, more lasting, and cheaper than common leather.

154

Cross-int. 30. The last question did not ask you to construe the claim, and I avoided this because it is the province of the court which shall hear this case to construe the claim and the function of an expert ceases with respect to the claim when he affords what aid he can in identifying or defining the subjects which are mentioned in the claim. And now, without asking you to state what the claim covers, I do ask you what you find in the specification that warrants

you in stating that the claim covers preparing rawhide in opposition to the statement of the claim itself that it is for the treatment of the prepared rawhide.

Ans. The claim is and must be for the invention set forth in the specification. The title of the invention is "improvement in the modes of preparing rawhide for belting," and Mr. Royer, in the preamble of the specification, says, "I have invented an improvement in the treatment of rawhide, especially for the use of belts and laces, of which the following is a specification." This, with the previously quoted extracts, clearly indicates what he means by "prepared rawhide," as well as the exact time in his process when the hide is prepared for belting and when the process is completed and the rawhide is prepared for lacing; for after describing all the steps in the process necessary to complete the prepared rawhide he goes on and says, "For purposes of lacings the thinnest hides are selected, and after they have gone through the same mode of treatment as hides for belting they are shaved, oiled, and hung up to get perfectly dry, when the hide is cut into strings."

Cross-int. 31. I do not see that you have answered the last
155 question; and assuming that it is useless to repeat it, I will call your attention to two errors in this answer, and then ask you for a further explanation of a previous answer. You quote the title of the invention, "improvement in the modes of preparing rawhide for belting," as though it were a part of the specification, whereas it is a mere brief title given by some official in the Patent Office, and the only statement binding upon the patentee is to be found in his own language in the specification. Secondly, you state that the claim must be for the invention set forth in the specification, whereas it need only be for such part of the inventions described in the specification as the patentee chooses to single out and claim for his own. Now, this being borne in mind, I will ask you whether the first four steps of the process described in the patent in suit, specified in your answer to the Int. 5, do not constitute a preparation of the hide of commerce which leaves it rawhide.

Ans. They do constitute a preparation of the hide of commerce and leave the hide a partially prepared rawhide.

Cross-int. 32. Do they not leave the hide fully prepared for the treatment which the specification describes as following them?

Ans. They do leave the hide prepared to receive the treatment described in the specification as following these steps. Each step in the process prepares the hide for the next succeeding step.

Cross-int. 33. In your answer to Int. 10 you state that the claim allowed in the Shultz patent of Feb. 20, 1877, clearly indicates that the Royer patent of 1874, which is here in suit, was intended to be limited to certain successive steps. By what rule of reasoning or law do you go backwards and ascertain what the intention of the Patent Office was in 1874, from an allowance of a claim in another proceeding three years later?

Ans. The examiner in charge of the Shultz case could only have allowed the Shultz patent by construing the claim of the Royer patent to be for the successive steps described in the specification,

and particularly that the invention was limited to a process for removing the hair, namely, sweating, as distinguished from liming; and all I hold is that the examiner at that time did so construe the claim in the Royer patent. As I believe that the same examiner who acted on the Shultz case also acted on the Royer case, it
156 is my opinion that in 1874, when he granted the claim of the Royer patent, he construed it in the same way, for the contents of the file-wrapper clearly indicate that he did so construe that claim.

(Counsel for complainant here objects to all the evidence which has been introduced regarding the Shultz patent as immaterial, irrelevant, and incompetent, and moves to strike the same out of the record.)

Cross-int. 34. In your answer to Int. 11 you stated that when a hide is unhaired by sweating and is then dried hard, its surface and the spaces between the tissues are completely covered with a hard, glutinous substance, through which it is very difficult to force the stuffing or preserving mixture, and that it becomes necessary to break up the hard substance by mechanical means before the stuffing can be worked into the hide. Did you state this from your personal observation of stuffing hides with tallow, tar, and rosin?

Ans. I state this partly from personal observation—that is to say, I have observed the condition of dried hide which had been prepared and had the hair removed by a process of sweating—but I have never seen tar, tallow, and rosin stuffed into such a hide.

Cross-int. 35. In your answer to Int. 12 you state that the effect of the stuffing compound on fulled rawhide is exactly the same as on tanned or partially tanned leather. Is it not the fact that tanned leather will remain soft and pliable without the application of such a stuffing compound, and that rawhide will become hard when dried without the application of such compound?

Ans. It is not a fact. Tanned leather, unless it is dressed or filled with some kind of dressing or oil, will become hard, particularly when it is exposed to change of temperature and moisture, but it will not decompose like rawhide that is prepared with some kind of greasy or oily substance.

Cross-int. 36. Do you think that hemlock-tanned belt leather is dressed or filled with tallow or oil?

Ans. It is not filled in the sense that rawhide is filled, but unless it is dressed with some oily or fatty substance it will become hard and stiff.

Cross-int. 37. Are you aware of the fact that both oak and
157 hemlock tanned belt leathers are commonly sold to consumers without being dressed with any oily or fatty substance whatever?

Ans. I am.

Cross-int. 38. Then it is not the fact that such leather will become so hard and unpliable as to be unfit for belts unless it is so dressed, and it is the fact that rawhide will become so hard and unpliable as

to be unfit for belts unless it is so dressed. Are not these statements true?

Ans. It is a matter of degree. The tanned leather can be kept a much longer time under varying degrees of temperature before becoming hard than the rawhide, owing to the fact that the one is completed leather and the other is the incompleted article.

Cross-int. 39. Did you ever hear of oak or hemlock tanned leather being used for belting successfully after it had been dressed with fat or oil?

Ans. I have seen it many times.

Cross-int. 40. Did you ever know of oak or hemlock tanned leather, kept under cover and dry, becoming so hard that it would not answer for belts, although no oil or fat had ever been applied to it?

Ans. I have seen oak leather so hard and stiff that it had to be dressed with tallow and similar substances before it could be used for belting, and I have seen such leather taken from shelves in tool-rooms, where apparently it was well protected.

Cross-int. 41. Are you aware of the fact that rawhide after being unhaired, if allowed to dry hard, is so impliable that it is not suitable for belting unless it is stuffed with oil or fat?

Ans. I am.

Cross-int. 42. Are hides commonly wet when they are fulled in the common fulling machines?

Ans. They are damp, but not wet.

Cross-int. 43. Did you ever see the attempt to stuff tallow into hides in the common fulling machines?

Ans. I should not like to answer that either "Yes" or "No." I have seen hides in the fulling machine; I have seen the composition spread on the hides, and I have taken it for granted that the
158 hides in the fulling machine were so covered with fat for the purpose of stuffing it into the hide. I know that that is the way the fat is worked into the hide, but, as the question is as to whether I have seen it attempted, I would say that I believe that when I saw the hide spread with fat and also saw the hides in the fulling machine that the stuffing mixture was then being worked into the hide.

Cross-int. 44. What kind of fulling machine have you referred to in your last two answers?

Ans. The beater fulling machine. I have also seen what is known as the pin block. I have also seen the old mode of treading the grease into the hide, the tanners wearing wooden shoes.

Cross-int. 45. Were these tanned hides which you saw in these various machines or were they rawhides?

Ans. Tanned hides.

Cross-int. 46. Did you ever see the attempt to stuff tallow into rawhides in either of these fulling machines?

Ans. I have.

Cross-int. 47. When and where and in what kind of machine?

Ans. Some three or four years ago, at the works of William Coupe

& Co., in their revolving fulling machines, such as are referred to in the Coupe patents which are in evidence.

Cross-int. 48. Did you ever see the attempt to stuff tallow into rawhides in the common fulling machines, such as you called the beater machine and which I understand to be similar to the machines used for fulling wool?

Ans. I have never seen the attempt of stuffing tallow into rawhide in any machine except in the Coupe machine referred to in my last answer.

JOSEPH A. MILLER.

Attest: ISAAC H. SOUTHWICK, JR.,
Special Examiner.

Counsel for defendants puts in evidence copies of the following letters patent of the United States:

Letters patent to C. G. Brand, No. —, dated April 25, 1848, and the same is marked "Defendants' Exhibit Brand Patent, I. H. S., Jr., sp'l ex'r."

159 Letters patent to John Rose, No. 14832, dated May 6, 1856, and the same is marked "Defendants' Exhibit Rose Patent, I. H. S., Jr., sp'l ex'r."

Letters patent to A. Taw, No. 44025, dated Aug. 30, 1864, and the same is marked "Defendants' Exhibit Taw Patent, I. H. S., sp'l ex'r."

Letters patent to Moses W. Page, No. 54587, dated May 8, 1866, and the same is marked "Defendants' Exhibit Page Patent, I. H. S., Jr., sp'l ex'r."

Letters patent to Thomas McDonald, No. 57165, dated Aug. 14, 1866, and the same is marked "Defendants' Exhibit McDonald Patent, I. H. S., Jr., sp'l ex'r."

Letters patent to Joshua Merrill, No. 100,652, dated March 8, 1870, and the same is marked "Defendants' Exhibit Merrill Patent, I. H. S., sp'l ex'r."

160 *Evidence for Complainant in Reply,*

Taken pursuant to the sixty-seventh rule of the Supreme Court of the United States, in equity, as amended, before me, George T. Knox, special examiner.

SAN FRANCISCO, CAL., *Jan.* 4, 1888.

Present: M. A. Wheaton, Esq., of counsel for complainant; Manuel Eyre, Esq., of counsel for defendants.

Deposition of Adolph Sommer.

Direct examination by M. A. WHEATON, Esq., of counsel for complainant:

Int. 1. What is your name, age, residence, and occupation?

Ans. Adolph Sommer; age, thirty-six; residence, Berkeley, Cal.; chemist.

Int. 2. What position, if any, do you hold at this time?

Ans. Assistant in chemistry at the University of California.

Int. 3. What is the University of California?

Ans. It is the highest of our State institutions of learning.

Int. 4. Are you acquainted and do you know what the chemical composition or constituency of the animal hide is?

Ans. That is too broad a question to answer affirmatively. The chemical constituents of the natural hide are so numerous, the whole making up a very complicated structure, to say positively under examination what is the whole construction of the skin would be a little more than I believe any chemist would attempt.

Int. 5. Of what elements is the general composition of the animal hide, such as are commonly used for the manufacture of leather?

Ans. I prefer not to give any definite answer to these questions relating to the construction of the hide; they are too complicated to give any definite answer which could not be misconstrued in some way; if it would relate to the effect of certain chemicals, if you speak of the effect of certain substances upon the hide, and some process, an answer could be given. Those matters require a little thought.

161

Int. 6. Can you state whether or not there is any such substance as gluten in animal hides?

Ans. I know positively there is none, in no animal tissue; no gluten, no glue.

Int. 7. What is gluten?

Ans. Gluten is an albuminous body, contained in the grains mainly.

Int. 8. What kind of grains do you refer to?

Ans. Cereal grains.

Int. 9. Is gluten partly a vegetable substance?

Ans. It is only found in vegetable substances.

Int. 10. Can you state what the effect is of applying lime to the green natural hide of animals?

Ans. You mean upon the hairy surface only, or in what manner?

Int. 11. As it is usually applied for the purpose of removing the hair.

Ans. The effect of lime applied to the hair side of a hide is, in the first place, to loosen the hair roots, hair vesicles, and the secondary effect, however, is that it enters the hide substance and combines therewith, forming apparently a definite compound which cannot be separated by means of pure water only.

Int. 12. With what elements in the hide will the lime chemically combine, if with any?

Ans. The lime will combine, I believe, with the whole substance of the hide.

Int. 13. There is albumen in natural green hides, is there not?

Ans. There is.

Int. 14. What is the effect of mixing lime with albumen?

Ans. The effect of mixing lime with certain albuminous substances is to form insoluble compounds in water.

Int. 15. You mean compounds insoluble in pure water?

Ans. Yes, sir.

162 Int. 16. What is the character of a compound formed by lime and albuminous substances such as are found in animal hide?

Ans. I would prefer to give examples of certain known albuminous bodies: White of egg combines with caustic lime readily in about ten minutes, and forming a hard cement. I cannot answer what that in the hide will do with lime; I have never dealt with it. Albumen is not always the same body. My experience has not extended to that. If you speak of what compounds lime forms with albumen on the white of egg I can answer.

Int. 17. Is it not a fact that by mixing lime with animal blood that buttons and other articles of manufacture which are necessarily very hard and solid are manufactured?

Ans. I believe it to be so from newspaper accounts. I cannot speak from my own knowledge. I have never seen such articles to my knowledge; that I cannot assert.

Int. 18. What is the effect of lime on the animal tissue in the hide, if you know?

Ans. It is to disintegrate such tissue, the effect of an excess of lime.

Int. 19. Is there much or little albumen in the animal hide?

Ans. There is but very little albumen in the animal hide.

Int. 20. Is there any in the vesicles of the roots of the hair?

Ans. Yes; there is some in the vesicles. There is albumen wherever blood reaches.

Int. 21. What is the effect of lime upon fat and the fatty substances of a natural hide?

Ans. The effect of lime upon fat in the hide is according to the degree of decomposition of the fat to form either a compound with the lime, which is termed lime soap, and which soap is insoluble in pure water, or if the fat has not become rancid it would be left intact.

Int. 22. In the case of fresh green hides where no decomposition has taken place of any kind, would the lime destroy the fat or have any effect whatever upon the fat?

Ans. The rapidity with which certain fats are oxidized differs very much. It can hardly be conceived that a hide could be offered to the manufacturer in which the fats have not suffered some

163 decomposition through the action of the atmosphere. It is safe to conclude that in all hides, as they are offered to the tanner, the lime would at least partially combine and form a lime soap.

Int. 23. In such case what becomes of the lime soap?

Ans. It is left precisely in the same position where the fat was originally; it would be left disseminated through the substance of the hide.

Int. 24. What effect does that lime soap have on the hide as to preserving it or assisting its decay or in any other respect?

Ans. I cannot conceive that it would have any detrimental or

beneficial effect upon the finished article. I do not think it would preserve it or tend to destroy the hide.

Int. 25. What would be its effect as to making the hide either softer or harder than the natural fat would have left it?

Ans. It would certainly be less pliable than the condition in which it was previous to decomposition; after the transformation of the fat substance into lime soap it would be less pliable than previous to such consolidation, but all the lime does not combine with the fat; there is some that does not combine with the fat; there is more lime absorbed by the hide substance than there is fat in the hide to combine with the lime; the portion of lime which is left uncombined with the fatty matter is most detrimental to the structure of the hide, of the finished article, because it tends to harden it, almost petrify the skin.

Int. 26. As to any fatty substances in the hide which are not affected at all by oxidation or decomposition, in which the fat was still fresh, would the lime have any effect whatever upon that?

Ans. The effect of lime upon fresh fats differs with the nature of the fat as well as with the strength of the lime and as well with the temperature and other conditions under which the two substances, the lime and fat, are brought together. It is impossible to say, without knowing the exact condition, whether the fat would be entirely combined with the lime or whether any free fat would be left in the hide uncombined with the lime. It is impossible to say that.

Int. 27. I understood from your answer awhile ago that fresh fat, if not at all decomposed or oxidized, will not be affected at all by the lime. Was I right or not in that understanding?

164 Ans. You are right in such as relate to pure tallow. If such is in the hide it is not readily acted upon by the lime, only in a cold state, but it will combine with lime when moisture and warmth are present at the same time.

Int. 28. Are you acquainted with the character of paraffine?

Ans. Yes, sir; I am.

Int. 29. What is the character of paraffine generally as compared with that of ordinary wood tar?

Ans. So far as the physical properties are concerned, the two are widely different substances. Paraffine is an inodorous, tasteless body, while tar is the very reverse of that. Paraffine, as it appears in market, is a white or nearly white solid substance, while tar is always a black liquid substance—black liquid compound. Paraffine, in a chemical sense, is composed of but a small number of closely allied substances, while tar is a very composite matter which can be separated into many substances bearing very little resemblance to each other.

Int. 30. How would paraffine compare with tar as the vehicle substance to assist, by its character of penetration, in carrying oil into hides?

Ans. That I cannot answer.

Int. 31. Why not?

Ans. I have no data to base an answer upon. I have never made any comparisons.

Int. 32. What is the melting point of ordinary paraffine?

Ans. The melting point of commercial paraffine differs very much. There are paraffines which melt below one hundred degrees Fahrenheit, while other paraffines which are considered the best grades melt near one hundred and fifty degrees Fahrenheit. Between these extremes in the quality of the paraffine different qualities may be found.

Int. 33. How much below one hundred degrees Fahrenheit does any of the commercial paraffine melt?

Ans. I do not know that any commercial paraffine melts below one hundred degrees Fahrenheit. I have never had a sample of commercial paraffine which melts below one hundred degrees.

Int. 34. What is the melting point of ordinary tallow?

165 Ans. What do you mean, beef or mutton tallow?

Int. 35. Both.

Ans. Beef tallow melts at about ninety-five degrees Fahrenheit. Mutton tallow melts between one hundred and five and one hundred and ten degrees Fahrenheit.

Int. 36. You used the expression "caustic lime." Is that the kind of lime commonly used by tanners for unhairing hides?

Ans. Yes, sir.

Int. 37. Does lime dissolve albumen?

Ans. That is a question that depends on conditions. I prefer not to give an answer to that question.

Int. 38. Do you understand the operation of loosening hair from hides by the sweating process?

Ans. Yes, sir.

Int. 39. In Mr. Coupe's testimony he speaks of the fatty matter and albumen forming itself into a cement while the process of drying the hide is going on, while the hair is taken off by sweating. Could such a thing as that occur or not?

Ans. That I consider impossible—albumen and fatty matter forming itself into a cement; that is impossible.

Int. 40. Mr. Coupe says as follows in answer 72, page 74: "They yet contain all of the fatty matter and a great part of the scud and the albumen, which, while the process of drying is going on, forms itself into a cement, as before spoken of, which is insoluble in water and makes the hide very difficult to soften when brought to the milling or fulling operation." Could that occur, as so stated, where the hair had been simply removed by sweating?

Ans. I cannot answer that question.

Int. 41. Would the albumen in the natural hide form a cement with anything in the hide or not?

Ans. The albumen might become insoluble in water by some treatment of the hide—drying or other treatment—and in that manner it might be spoken of as a cement, because it is insoluble and cannot be removed by mere washing with water.

Int. 42. Would not a natural hide always soak soft if placed in water?

Ans. You don't know precisely what condition the hide

166 arrived or might be in. It may have been submitted to antiseptic treatment.

Int. 43. I am speaking about the natural hide which has been simply unhaired by sweating, on which no chemicals at all had been used—no other treatment except simply unhaired by sweating. Will not such a hide always soak soft if placed in pure water and left there long enough?

Ans. I don't know. I won't answer that. The conditions may vary so that one thing might occur or the other.

Int. 44. Suppose that a hide always would soak soft, as a matter of fact. In that case would not the pure water dissolve the albumen in all cases where the albumen had not been acted upon by any chemical or other substance foreign to the hide?

Ans. I cannot answer that question, either.

Cross-examination by MANUEL EYRE, Esq., of counsel for defendants:

Cross-int. 45. Mr. Sommer, do you know that tanners have a mode of removing the lime by means of what they call bating?

Ans. Yes, sir; I am aware of that.

Cross-int. 46. That removes the lime effectually, does it not?

Ans. It renders the lime inert or harmless to the hide.

Cross-int. 47. Do you know whether or not it removes the lime?

Ans. The bating cannot possibly remove the lime. The alkaline bating cannot remove the lime. It renders it harmless.

Direct examination resumed:

Int. 48. To what kind of bating do you refer when you mention alkaline bating?

Ans. Hen manure and kindred substances are used.

Int. 49. Those are the kind ordinarily used by tanners for counteracting the effect of the lime used in removing the hair?

Ans. There are other batings used in tanning.

Int. 50. The question is whether those are the ones ordinarily used.

Ans. Not ordinarily used.

167 Int. 51. What kinds are not ordinarily used that are not alkaline?

Ans. There is a special term applied to sour batings called drenching.

Int. 52. Then you use the term "alkaline" as in contradistinction to sour batings, do you?

Ans. Yes, sir.

ADOLPH SOMMER.

Deposition of Christian Hellwig.

Direct examination by M. A. WHEATON, Esq., counsel for complainant:

Int. 1. Please state your name, age, occupation, and residence.

Ans. Christian Hellwig; age, forty; occupation, tanner; residence, San Francisco.

Int. 2. How familiar are you with the manufacture of buckskin, chamois skin, glove leather, and army leather?

Ans. I am manufacturing the same for a number of years, except the army leather I have made very little of. I have been in the business about twenty years.

Int. 3. What was the process, say prior to 1870 or 1872, of manufacturing buckskins?

Ans. The skins were soaked in water, then softened on a beam and the surplus flesh taken off, then limed, unhaired, the grain removed from the grain side, then the lime is partially removed, then they are fulled in fish oil. The skin is partially dried and fish oil put on the skin and worked in a fulling mill until the oil is soaked into the skin. This is repeated five or six times—the milling process—until the water is evaporated and replaced by the fish oil; then the skins are let lay in the oil, in order to give the oil time to oxidize, say about from one to two months. The oil is then washed out with alkali, and the skin is then softened and finished for use. That is the buckskin alone. Any other skins were first put into the fulling stocks.

Int. 4. What was their condition as to dryness or moisture?

168 Ans. There was enough moisture removed from the skin to allow the oil to be put on the skin.

Int. 5. Can you give an idea of how much moisture there is in the skin when they are put into the fulling stocks?

Ans. You might call it about half dry.

Int. 6. Did that leave them wet enough so that they were soft and would bend and double easily on account of the moisture that was in them?

Ans. It did.

Int. 7. Did you ever know any skins, prior to 1870, to be treated in the fulling stocks that were not moist entirely through them when they were first put into the fulling stocks?

Ans. No; I didn't know of any.

Int. 8. Did you ever know any to be treated in the fulling stocks that were not only wet through when they were put into the fulling stocks, but they were also kept wet through with water or oil, or some other fluid, during all the time they were in the fulling stocks under treatment?

Ans. I don't know of any that was not.

Int. 9. Do you know what Mr. Royer's process is for making what he calls his fulled rawhide?

Ans. I know part of his process. I am not familiar with the workings of it.

Int. 10. Do you understand a part of it to be the milling or working of the hide in a machine, while the hide is so nearly dry that the operation of bending it in the machine loosens the fibres by mechanical action?

Ans. I do.

Int. 11. Supposing that to be part of his process, has that step ever been used prior to 1872 in the manufacture of any kind of buckskin, chamois skin, or glove leather, or army leather, or factory leather of any description?

Ans. Not to my knowledge.

Int. 12. Whereabouts were you at work at the manufacture of buckskin or any similar kind of leather prior to 1872?

Ans. In San Francisco.

Int. 13. Anywhere else?

169 Ans. No, sir.

Int. 14. Were you at that time perfectly familiar with the uses that fulling stocks and fulling wheels had been put to by tanners?

Ans. I was.

Int. 15. Of how large an establishment are you the proprietor now?

Ans. The capital invested is about $100,000. We turn out very near five hundred buckskins a day and employ about sixty men.

Int. 16. Were you carrying on the business for yourself in the manufacture of buckskins prior to the year 1872?

Ans. I was.

Int. 17. How much of an establishment did you have in 1872 and prior thereto?

Ans. My establishment was about one-tenth the size that it is now.

Cross-examination by MANUEL EYRE, Esq., of counsel for defendants:

Cross-int. 18. This process, concerning which you have been asked by Mr. Wheaton in Int. 10, may have been in use in the United States and you never known it?

Ans. It cannot be done to leather. No leather can be manufactured if the skins are put in the stocks too dry.

Cross-int. 19. He describes to you in that interrogatory Mr. Royer's process. Might it not have been in use in the United States without your knowledge?

Ans. Yes, sir.

Direct examination resumed:

Int. 20. Would it be possible to work hides in the fulling stocks or in fulling wheels and produce any beneficial effect upon them if they were put in as dry as the hides are which Mr. Royer treats in his machine?

Ans. It would not have any beneficial effect whatever.

Int. 21. Mr. Hellwig, to what extent had you known hides to be treated to lime when tanning made into buckskin or anything else prior to 1872?

170 Ans. They were limed and the hair taken off and put back into the lime again, the whole liming process taking three or four weeks.

Int. 22. In what shape was the lime when the hides were first put into it, when the hair was first taken off?

Ans. It was slacked lime. You have to use water in order to slack lime. It was a solution of lime.

Int. 23. How long would the hides be kept in that lime before the hair was taken off?

Ans. That depended a good deal upon the weather. It would take sometimes two or three days and sometimes a day or two longer.

Int. 24. Was it a usual thing among those manufacturing buckskins to put the hides back into the lime after the hair had been removed prior to 1872?

Ans. That was the regular way of treating them by everybody.

Int. 25. What was the object of putting the hides back into the lime after the hair had been removed?

Ans. It was to produce more spongy and softer leather.

Int. 26. After the hides were put back into the lime for a week or two after being unhaired, what was done with the hides then with regard to washing the lime out or leaving it in the hides, if anything?

Ans. It was partially removed.

Int. 27. What was the object of partially removing the lime?

Ans. In order to have the leather come out soft and pliable enough.

Int. 28. Was it the case that the tanners usually removed about the same proportion of lime in all cases?

Ans. Not in all cases. It was only partially removed for glove leather, perhaps.

Int. 29. What was the object and effect of leaving lime in the hide of glove leather—a large proportion of lime in the hide?

Ans. To prevent the leather from being too stretchy.

Int. 30. Did leaving a large percentage of lime in the hides make the leather more soft or hard?

Ans. The more lime left in the leather the more solid it would be when it was finished.

171 Int. 31. What was the difference in the treatment between those hides which were intended to make strong, heavy gloves for men's wear and the treatment of those hides which were intended for thinner and finer gloves?

Ans. So far as buckskins they were treated about the same.

Int. 32. How was it in regard to other skins?

Ans. In kid leather all the lime had to be removed from the skin.

Ans. 33. What was the effect of removing all the lime from the skin?

Ans. It is done in order to make it more soft and pliable and elastic.

Int. 34. What effect has the greater or less extent of liming the hide upon the tensile strength of the leather when it is finished?

Ans. The more a skin is limed the less strength it will have when finished into leather.

Int. 35. How long has that been known among tanners—manufacturers of buckskin and glove leather?

Ans. I suppose that was known since the art of dressing buckskin in that style was invented.

Int. 36. How long have you known it to be a fact that it was well known among the tanning fraternity?

Ans. I have known it for twenty-five years.

Int. 37. When was any of the buckskin or glove leather or any hides treated in either the fulling stocks or fulling wheel known to the trade as fulled rawhide or fulled leather?

Ans. What do you mean by fulled leather? I didn't know any such article until I saw Mr. Royer's fulled rawhide.

Int. 38. Did you ever know any article made of animal hides, however treated, to be called by the term fulled leather or fulled rawhide or fulled hide or by any other name of which the word "fulled" was a part prior to the time Mr. Royer gave that name to his fulled rawhide?

Ans. There was no other kind except the buckskins which I have described. The word "fulled" was not applied to any particular kind of leather that I know of.

Int. 39. If a deer's hide was treated by Mr. Royer's process
172 by which he makes his fulled rawhide would it make the buckskin or some kind of leather that was made of deerskin by any process to which it was subject prior to 1872?

Ans. Well, I can't say.

Int. 40. Do you know Mr. Royer's patented process?

Ans. I know enough about it to say that there would be a great difference between the way buckskins were tanned and a buckskin which would be tanned by Mr. Royer's process.

Int. 41. Would there be a great difference in the finished leather?

Ans. There would be a great difference.

Int. 42. Then there would be a great difference if it was tanned under Mr. Royer's process from what it would be if it was tanned under any other process known prior to 1872?

Ans. There would be a great deal of difference—I mean the process generally in use.

Int. 43. Which would make the stronger leather, a hide treated by Mr. Royer's process or one treated by any other process known prior to 1872?

Ans. The one dressed by Mr. Royer's process would be the strongest of any.

Int. 44. Please state whether or not the effect of lime used in the

treatment of hides destroys, to a greater or less extent, the tensile strength of finished leather.

Ans. It does destroy the strength of leather to some degree.

Cross-examination resumed:

Cross-int. 45. Is a tanned leather belt of greater tensile strength than one made by Mr. Royer's process?

Ans. I think the rawhide is a stronger belt than the tanned leather belt. I compared the strength of both leathers and I am satisfied the rawhide is the strongest.

Cross-int. 46. Did you make any army leather belts, cartridge straps, white leather?

Ans. Yes; I made a small quantity.

Cross-int. 47. How did you treat it?

Ans. Similar to the buckskin process.

173 Cross-int. 48. Just give me the process.

Ans. It is made out of oxhides which were soaked and fleshed, limed, and the grain taken off. Every two or three weeks the lime was partially taken out; then they were fulled in oil the same way as the buckskins are done, only they require more fulling than the buckskin on account of the more solid condition of the hide.

Cross-int. 49. You treated them in the fulling mill with oil?

Ans. Yes, sir; the same as buckskins; then left to oxidize, the oil washed out again, then the leather was bleached so as to give it the white color and finish.

Direct examination resumed:

Int. 50. In the treatment of all kinds of hides for buckskin, chamois skin, and glove leather, please state whether or not the oil is always all taken out before the article is considered finished.

Ans. The oil is always taken out.

Int. 51. Were those the class of skins which were called oil-tanned, those that were made for buckskin, glove leather, army leather, etc., under the treatment you have described?

Ans. It was called oil-tanned.

CHRISTIAN HELLWIG.

Deposition of Max Ott.

Direct examination by M. A. WHEATON, Esq., of counsel for complainant:

Int. 1. Please state your name, age, residence, and occupation.

Ans. Max Ott; sixty years of age; San Francisco; tanner.

Int. 2. How long have you been a tanner?

Ans. Forty-five years.

Int. 3. To what extent were you acquainted with the manufacture of buckskins, glove leather, factory leather, picker leather, etc., prior to 1872?

Ans. I have had no experience in glove leather prior to 1872. I mean buckskins by that.

Int. 4. Do you understand the difference between unhairing hides by lime and unhairing them by the sweating process?

174 Ans. I do, sir.

Int. 5. Please state whether or not any injury occurs to the hides by the sweating process.

Ans. If the men are careful, there is no injury to the hide by unhairing by the sweating process.

Int. 6. What is the effect of lime in the hides?

Ans. The effect of lime in the hides is to loosen the hair, at the same time swelling up the hide.

Int. 7. Do you understand the chemical operation of the lime upon the hide which causes that swelling up?

Ans. No, sir.

Int. 8. Do you know what the effect of lime is upon the hide after you use a good deal of the lime in treating the hide and fail to remove it all afterwards?

Ans. It makes it hard and brittle.

(By Mr. EYRE:)

Int. 9. He asks you if you know.

Ans. Yes, I do know; it makes it hard and brittle.

(By Mr. WHEATON:)

Int. 10. How extensively have you known single hides to be treated to lime in the course of your experience, prior to 1872?

Ans. I have for twenty years. I have had experience, knowing the way hides are treated to lime, before that.

Int. 11. Twenty years prior to 1872?

Ans. Yes, sir.

Int. 12. As early as 1852?

Ans. Yes, sir.

Int. 13. Have you known instances where hides were treated to lime more than was necessary for the purpose of unhairing those hides?

Ans. Yes, sir.

Int. 14. What kind of leather was made from those hides?

Ans. Shoe leather.

Int. 15. What was the object in those instances to treating them with more lime than was necessary in unhairing?

Ans. To make them more soft.

Int. 16. How long have you known such hides to be kept

175 in lime, after the hair was taken off, for the purpose of making them more soft?

Ans. From three to four weeks.

Int. 17. What kind of hides were they usually?

Ans. Dry hides.

Int. 18. I mean what kind of animals.

Ans. Cows and steers.

Int. 19. Was there any special name for that kind of leather that was made by that extended lime treatment?

Ans. It was shoe leather.

Int. 20. How long prior to 1872, to your personal knowledge, was it common for tanners to treat hides to lime after they were unhaired?

Ans. As long as I can remember.

Int. 21. Prior to 1872 did tanners generally, those that understood their business well, understand all the effects of superliming, or treating hides to lime, for different lengths of time after the hair was taken off?

Ans. Most of the tanners knew it. They did.

Int. 22. That was common knowledge among the tanning fraternity?

Ans. Yes, sir.

Int. 23. Prior to 1872, in the course of your business, did you ever use fulling stock and fulling wheels?

Ans. No, sir; I never saw it. I worked in different places and never saw it.

Int. 24. Did you ever know any article that was made from animal hides to be known as fulled leather, fulled rawhides, or by any name in which the word "fulled" was a part, prior to the time Mr. Royer's fulled rawhide came on the market?

Ans. No, sir.

Int. 25. Was there any such name of which the word "fulled" was a part known to the tanning trade prior to the time Mr. Royer applied the term to his rawhides?

Ans. No, sir; not to my knowledge.

Int. 26. When was the first you ever saw an article made
176 of hides that was like Mr. Royer's in its qualities, still being rawhide and possessing immense tensile strength?

Ans. I never saw any until I seen Mr. Royer's.

Int. 27. In what part of the United States had you been in the tanning business, either as proprietor or an employee, prior to 1872?

Ans. I had been in St. Louis, Tennessee, and California.

Int. 28. How long were you in St. Louis, when, and during what years?

Ans. In 1854 I was in St. Louis, and until 1859.

Int. 29. Where in Tennessee, and how long?

Ans. In Perryville, East Tennessee, for one year.

Int. 30. In cases of superliming, what means were adopted for removing the lime?

Ans. Hen manure, dog manure, or bating of some kind.

Int. 31. State whether or not it was necessary, in case of superliming, to always remove the lime.

Ans. For certain leather it has to be removed; for belt leather the lime has to be removed. The lime has to be worked out of the hide.

Int. 32. What would be the effect if the lime was not worked out of the hide?

Ans. It makes the leather hard and brittle. It loses strength.

Int. 33. How is it as to a hide that is unhaired by sweating becoming gummy and sticky?

Ans. I don't know that it becomes gummy and sticky. I never seen it.

Int. 34. If they did become gummy and sticky would you have known it from your experience?

Ans. Yes, sir; I would have known it.

Int. 35. Is there any insoluble cement formed in a hide unhaired by sweating, simply from unhairing it by sweating and letting it dry?

Ans. No, sir.

(No cross-examination.)

MAX OTT.

177 *Deposition of Jacob William Fennel.*

Direct examination by M. A. WHEATON, Esq., of counsel for complainant:

SAN FRANCISCO, *Jan.* 7, 1888.

Int. 1. Please state your name, age, residence, and occupation.

Ans. Jacob William Fennel; twenty-five years of age; residence, San Francisco; tanner.

Int. 2. What kind of leather have you had the most experience in manufacturing?

Ans. Leathers of all descriptions, buckskins in particular.

Int. 3. Do you know what the process was prior to 1872 for manufacturing buckskins?

Ans. I do; yes, sir—that is, on the authority of others, reading books, etc. I didn't manufacture any myself at that time.

Int. 4. Have you manufactured buckskins since then?

Ans. Yes, sir.

Int. 5. So far as you know about the manufacturers of buckskin, they follow the same process as they did prior to that date?

Ans. They do; yes, sir. I know that from my own experience.

Int. 6. State, in as few words as you can, the several steps in the manufacture of buckskins.

Ans. The skins are first soaked in water, then broke or softened, and then thrown into lime and handled several times in the lime—that is, they are taken out and put back again. They are left in the lime from three to five weeks; then they are taken from the lime and fleshed; then the hair and grain is taken off. There is a difference in some tanneries. In some they dry the skins; others take them right direct from the beam and full them with fish oil in the fulling mill; others they are dried. They are soaked in water until they are so soft that you can bend them in any shape; can take them in your hand and squeeze the liquor out of them.

Int. 7. Are they put in the fulling mill in that wet condition?

Ans. They are thrown right from the water into the fulling mill. The skins are full of water, and there is the surplus water,
178 also, in the mill. After they have been worked in the mill until the fibres loosen, while they are yet in the fulling mill the oil is worked into the skin by the action of the mill. Then they

are filled full of oil—as much oil as they can take up. They are then taken out in five or six days and aired; then put back until they are full. After that they are left lying in the loft for any length of time—a week or six, eight, nine, or ten months.

Int. 8. Are they piled in stacks or spread out?

Ans. Some pile them in stacks and watch them and pull them apart when they get too warm; then they are spread out and let lay in the loft.

Int. 9. Are they finished then?

Ans. First they are soaked again in a solution of water and soda ash. They are then taken and thrown into the fulling mill, fulled once more, and water left to run on them to wash the oil out. The soda ash cuts the oil and makes a soap. The water will wash the soap out.

Int. 10. Is the fish oil washed out?

Ans. No. They are then taken to the beam to remove what little grain there is left; scudding that is called. Then they are hung up and dried again, and after they are dry they are soaked again in a solution of soda ash and water, weaker than the first, and washed again. Then they are hung up and again dried; then soaked again the third time in pure water; washed again; then they are hung out to bleach. After they are bleached and dry they are slightly moistened and either stretched on a machine or worked by hand until they are thoroughly soft.

Int. 11. Do you know what is called scud by those who make buckskin?

Ans. Scud? There is a grain on a skin, and when they are grained there is an under grain, and that has to be removed for the purpose of coloring. If you wanted to color a skin the streaks would show through the color; the face of the skin would not be open. All this grain has to be removed, so that the face of the skin is open and free to make a nap.

Int. 12. Is this grain or any grain what is called scud in making buckskin or other leather?

179 Ans. The stain that they remove is what is called scud.

Int. 13. You speak of a hide being softened after it is first soaked. How is that softening done?

Ans. It is thrown into the fulling mill. It is almost as soft as mush. There might be a spot that didn't get soft enough, then it has to lay a few minutes to soften more. In order to have this fish oil penetrate the fibres have to be entirely loose, so as to let the oil strike through, worked into the skin, soaked into the fibres.

Int. 14. Did you not speak of a skin being softened, after it was first soaked, before the hair was taken off?

Ans. Yes; soaked and worked. Some work them on the beam; others throw them into the fulling stocks. They must be soft, no dry spots in them, so that the lime affects them uniform.

Int. 15. When they are softened on the beam, how is that done?

Ans. They are thrown in, flesh side up, and scraped off with knives. That is what we call fleshing.

Int. 16. When that hide is thrown on the beam, in what condition is it as to moisture?

Ans. It is thoroughly soaked.

Int. 17. During the entire process of the manufacture of buckskin, is there any step in it in which the hide is manipulated mechanically by any bending or pounding operation while that hide is dry?

Ans. There is none.

Int. 18. Is there any step in it in which the hide is manipulated while the hide is so thoroughly dry that bending it will separate the fibres mechanically?

Ans. There is none.

Int. 19. Are the hides always kept so soft by moisture that they will easily bend and double on account of being softened by moisture?

Ans. Yes, sir.

Int. 20. Do you know whether those facts alluded to in the last three or four questions apply also to the treatment of the various kinds of glove leather manufactured?

Ans. They do; yes, sir.

180 Int. 21. When hides are treated with lime, do you know what the effect is of leaving lime in the hide?

Ans. The skin will never be so soft after it is finished; the skin will be firmer, the fibres will not be so loose; the lime will prevent the tannin from entering.

Int. 22. Suppose in one case the hide is unhaired by sweating and in the other case it is unhaired by liming and afterwards bated, but not so thoroughly bated but what some of the lime is left in the hide. Suppose those hides are treated precisely alike for the manufacture of buckskin or glove leather. Which will make the softer leather of the two—the one unhaired by sweating or the one unhaired by liming and then bated, but some of the lime still left in the hide?

Ans. The one that has been limed will be softer than the one that has been sweated—that is, provided they are tanned by the same process afterwards.

Int. 23. You have seen some buckskin gloves, have you not, that were very stiff and others that were thinner and very soft. Do you know what makes the difference?

Ans. A skin that is thinner is a skin that probably has been sweated, and the one that comes out thicker and softer has been limed. The lime loosens the fibres, and the tan enters easier into it, besides it is in the fibres of the skin; also when the skin is limed it is porous, like a sponge, and by sweating the skin remains flat, the fibres are not so thoroughly loosened in them; therefore it does not take up the tan so readily as the limed skin. If you were to take a sweated skin and try to tan it as it comes from the sweat, you could not tan it all; it would not be the proper thing; it should be dried first.

Int. 24. Suppose a skin is unhaired by liming and then afterwards it is thoroughly bated, so as to remove all of the lime that can be

removed; does that skin go down flat again like a skin that has not been limed?

Ans. No; not as flat as it would if it had not been limed.

181 Cross-examination by MANUEL EYRE, Esq., of counsel for defendants:

Cross-int. 25. You call that a fulling wheel?

Ans. No; a fulling machine.

Cross-int. 26. It isn't a wheel?

Ans. No; the wheel we call a drum.

Cross-int. 27. Do you know the mechanical part in one of those drums?

Ans. I do. We use the drum for washing.

Cross-int. 28. What is the fulling machine?

Ans. It is a kind of an iron box. There are two trip-hammers that work backwards and forwards; there is something similar to a row of steps. These hammers work backwards and forwards; being wider at the bottom, they squeeze from the bottom; they turn the skins over, squeeze them, and turn them.

Cross-int. 29. The box itself does not turn?

Ans. No, sir.

Cross-int. 30. You put them back again until they are full?

Ans. Yes, five or six times, until they are full of oil.

Cross-int. 31. When you take the skins out the last time they are thoroughly full?

Ans. Yes, sir.

Cross-int. 32. Is there deleterious effect from the lime if the hides are thoroughly bated?

Ans. In making buckskin we don't bate them at all; we leave the lime in; there is a great deal comes out by washing; they are not bated at all; we take them right from the beam; they are washed in clear water, just drawn through the water; we don't use any hen manure then; they are only washed; not washed thoroughly.

Cross-int. 33. You aim to keep the lime in, then?

Ans. To some extent. The reason we do not take the lime out we do not think it necessary. The fish oil makes the skin so soft there is no use to take the lime out thoroughly. The oil combines with the lime and makes a soap; of course, the lime cuts the oil to a certain extent and makes the soap.

182 Direct examination resumed:

Int. 34. To what extent have you known them to carry liming in the manufacture of buckskins and glove leather after the skin- have been unhaired?

Ans. That varies a great deal. In order to get the skin thoroughly soft and the fibres loose, so that the skin will be soft, the longer you lime it the softer the skin will be. They only do that in cases where the skin is unhaired. It is not plumped enough. It is only where they find out that a skin is not plump enough they might throw it back to suit themselves. I have known that to be done.

Int. 35. Is the effect of different degrees or extent of liming hides been well known to tanners for a great many years, so far as you know?

Ans. I cannot say. So far as I know, in my experience, I find that to lime a skin thoroughly it is better in one respect, making the leather soft and pliable. The leather is not so strong; it makes it weaker.

JACOB W. FENNEL.

Deposition of James Mullen.

Direct examination by M. A. WHEATON, Esq., of counsel for complainant:

Int. 1. What is your name, age, residence, and occupation?

Ans. James Mullen; age, forty-one; San Francisco; tanner.

Int. 2. How long have you been a tanner?

Ans. Since 1867.

Int. 3. Do you know William Coupe and Mr. Burgess, of South Attleboro, Massachusetts?

Ans. I know them both; yes, sir.

Int. 4. When, if ever, were you in their employ?

Ans. From July, 1870, about eight years. I cannot say the exact time I left them.

Int. 5. Beginning in July, 1870?

Ans. Yes, sir.

183 Int. 6. What kind of leather were they principally manufacturing when you were with them?

Ans. Patent tan lace, Page's patent picker leather, white tanned leather, white tanned lacing; that is all they made then.

Int. 7. Of which kind did they manufacture the most?

Ans. Patent tan lace, Page's patent.

Int. 8. Please describe the process of the manufacture of that tan lace under Page's patent.

Ans. First, they got the Calcutta hides, soaked them in water and put them in the fulling mill; softened them thoroughly.

Int. 9. What kind of Calcutta hides?

Ans. Calcutta cows and bulls; then took and washed them in the wheel; then took them out and split them into two sides and put them into the lime and they lay there eighteen days, about; then took them out and worked the hair off, washed them and gave them a green shave—shaved the flesh off; then put them in the bate. They were in the bate four hours—from four hours to twenty-four at that time; then took them out and worked the scud off; then they were washed and put into the tan again—gambier tan—and left there about four days; it is salt and alum, saltpetre and glober salts; that is what we call gambier tan; they are left there four days. They are then taken and put into the salt-and-alum tan and they stay there about two days; then take them out and dry them, so they won't be too dry for the shavers; just about half dry; then bring them in and let the shavers shave them; then send

them to the tables, where they are stoned and flat; then the shavers get them back again and buff the grain side off; then stuff them up with grease—both sides—and hang them up and dry them; take them down the next day; double grease them with neat's-foot oil and tallow; then roll them up and pound them in the pounding block; then they are ready for finishing and ready for the market.

Int. 10. How long would each skin be kept under the pounding block you have mentioned?

Ans. About two and a half minutes, unless very hard; they might be kept four minutes.

Int. 11. How much moisture was there in them when they were put under the pounding block—either water or oil or anything else?

184 Ans. No moisture of water at all; it was all oil or tallow the moisture that was in them.

Int. 12. Were they saturated with oil and tallow?

Ans. They were saturated with neat's-foot oil and tallow when they were put under the pounding block.

Int. 13. Do you know what kind of article Mr. Royer manufactures called fulled rawhide?

Ans. Yes, sir.

Int. 14. When, if ever, did Coupe and Burgess commence to manufacture an article similar to that?

Ans. So far as I can think or tell the truth, it was 1876 or near 1877. At the time I didn't bother nothing with it; I can't give the date.

Int. 15. Did you know at the time when Mr. Coupe commenced to make or trying to make an article similar to Mr. Royer's fulled rawhide?

Ans. Yes, sir; I was right there; yes, sir.

Int. 16. What did you first know Mr. Coupe to do or say in regard to such an article?

Ans. The first thing I seen him do I didn't hear him say anything. I seen some patterns of rawhide about a year ahead of that time; about the last of 1873.

Int. 17. What do you mean by patterns?

Ans. Two pieces of Mr. Royer's rawhide.

Int. 18. Do you know where Mr. Coupe got those patterns or samples?

Ans. I heard they came from San Francisco. Mr. Coupe didn't tell me this, but the clerk did, Mr. Goad. He was clerk to Mr. Coupe and Burgess; he is dead.

Int. 19. He was there in their employ, was he?

Ans. He was then.

Int. 20. Did you hear Mr. Coupe himself say anything about those samples?

Ans. No, sir; I did not.

Int. 21. Did you know Mr. Coupe to do anything with those samples?

185 Ans. No, sir; I can't say anything about the samples. Mr. Goad showed them to me.

Int. 22. Do you know what machines Mr. Coupe first used in his place to manufacture that kind of an article?

Ans. Yes, sir; he started building a large wooden wheel about half as big again as a common wash-wheel—about a ten-foot wheel.

Int. 23. How did he fix the inside of it?

Ans. With four-inch pins in it.

Int. 24. What experiments or efforts did he make to use that wheel for manufacturing fulled rawhide?

Ans. He fixed a machine outside of that wheel with steam pipes and put up a fan to blow the air into the wheel, and then took the hides that were limed, brought them down and dampened them with water and put on this stuffing of Mr. Royer's here—wood tar, tallow, bees-wax, and resin.

Int. 25. Had the hides been unhaired at that time?

Ans. Yes, sir; unhaired and dried and worked out.

Int. 26. Were they bated?

Ans. Yes, sir.

Int. 27. In what condition were they in regard to moisture when Mr. Coupe put them into the wheel you have described?

Ans. Just a little damp.

Int. 28. Were they still stiff?

Ans. Yes, sir.

Int. 29. What did he do with them in that wheel?

A. They were on the wheel two or three days, about. He kept them there until the hides were pretty well thumped on the wheel, then took them out again, and they came out just the same as they went in.

Int. 30. What did he do next with the wheel?

Ans. He took it down and threw it out into the yard. Then he built a little house and put in one of Mr. Royer's machines, then went at it in good shape.

Int. 31. What do you mean by Mr. Royer's machine?

Ans. I don't know what you call it yourself—hide-finishers. A shaft goes up through and a bolt through it, so that you can
186 cut a hole in the end of the hide, so that you can screw it onto the center of the shaft, then fixed in the bars, and then started the machine.

Int. 32. Did the bars make a drum of the machine?

Ans. Yes, sir.

Int. 33. Was the machine horizontal or perpendicular?

Ans. Horizontal.

Int. 34. What did he then do?

Ans. Started the machine and run the hide all into it. The boy started it and run it and then started it the other way; reversed it himself. He kept that boy until he had it running in good style. Then he put up in the down-stairs room in the building one of these machines, with a shaft up through the centre, and six of these other machines attached to it, and before I left there they put in four more of the same style, only larger and heavier.

Int. 35. Did these last machines you speak of prove successful?

Ans. Yes, sir; these are the machines doing the work to-day.

Int. 36. Can you tell the difference between the leather Mr. Coupe manufactured with these machines—these last kind of machines you have mentioned—and the lace-leather he manufactured before that?

Ans. Yes, sir.

Int. 37. Please do so.

Ans. Well, of course, the tanned lacing was tanned a very bright yellow color, and his rawhide was the same color as Mr. Royer's here; just the very same as that (refers to sample); the very same stuff in it, too.

Int. 38. Until he got the machines last mentioned by you at work had Mr. Coupe or Coupe and Burgess ever made any lace-leather which was of the same kind as that which they made with those machines?

Ans. No, sir; none of the same kind, sir.

Int. 39. Can you tell why the leather that they made with those machines was different from any other kind of leather which they formerly made and what made the difference?

Ans. One was tanned and the other was not tanned at all.

187 Int. 40. Have you ever heard the term "oil-tanned" used?

Ans. Yes, sir; where I am now.

Int. 41. Did you ever hear it used in the East?

Ans. Yes, sir; I heard them talk about it; that is all.

Int. 42. Do you know what was meant prior to 1872 by oil-tanned leather?

Ans. No; I never seen no rawhide or oil-tanned leather before I seen it in Coupe's; he is the first I ever saw with it.

Int. 43. Whenever he treated a hide under his hand pin block or other kind of a hand machine how long would he have each hide in that machine?

Ans. Two or three minutes.

Int. 44. Did he have fulling stocks or fulling wheels?

Ans. Yes, sir; he had.

Int. 45. What did they use those fulling stocks for?

Ans. For softening soaked hides. They came from Calcutta hard and dry. They soaked them in water, and took them out and put them in the fulling mill, made them soft and then washed them.

Int. 46. Did he ever put any other hides into those fulling stocks when the hides were dry or when they were not so wet that they were partly limber from moisture?

Ans. No; you could always see the water in them; the water was running right out of them when they were put in.

Int. 47. Did you ever see him put any hides into those fulling stocks for treatment which were as dry or near as dry as the hides he treated in his horizontal crib machines?

Ans. No, sir.

Int. 48. Did you ever see him treat any hides in his horizontal crib machines which were as wet as the driest of those which he put in his fulling stocks?

Ans. No, sir; I never did.

Int. 49. While manufacturing the Page patent lace-leather, did they use to treat those hides with lime?

Ans. Yes, sir; they limed them all.

Int. 50. Do you recollect whether they put them back into the lime or not after they had taken the lime off?

188 Ans. No, sir; they never put them back into the lime; they were what they called green-shaved and then set in the bate.

(No cross-examination.)

JAMES MULLEN.

Deposition of James Mullen (Recalled).

Direct examination by M. A. WHEATON, Esq., of counsel for complainant:

SAN FRANCISCO, *Jan.* 11, 1888.

Int. 1. By what name did Mr. Coupe call the rawhide which he treated in his breaking and boarding machine, as he called it?

Ans. He never had no such thing.

Int. 2. By what name does he call the lacing which he manufactures in his crib machine in which he used stuffing composed partly of tar for the last several years?

Ans. He called it rawhide; I never knew any other name he had for it.

Int. 3. Does he call it rawhide lacing in selling it to the trade and when he talks about it among the hands who are manufacturing it?

Ans. Yes, sir; rawhide.

Int. 4. Did he ever manufacture, while you were with him, any other kind of an article which he called rawhide or sold as rawhide?

Ans. No, sir; he never did.

Int. 5. What kind of a stuffing did he use when he first commenced making this rawhide lacing?

Ans. Tallow, bees-wax, and wood tar.

Int. 6. Did he ever use any paraffine or paraffine oil as a part of his stuffing with that rawhide?

Ans. No, sir.

Int. 7. Do you know whether or not he ever tried unhairing his hides by sweating in the manufacture of this rawhide?

Ans. No, sir; he never tried it in my time.

189 Int. 8. How long would he keep the hides in lime before he unhaired them that he made rawhides from?

Ans. From fourteen to eighteen days.

Int. 9. How long did he keep those hides in lime that he unhaired for manufacturing his Page leather from?

Ans. Just the same time. He couldn't do no less. Sometimes he tried, but the hairers couldn't take the hair off.

Int. 10. Was it necessary to keep hides in lime as long as he did before he could get the hair off?

Ans. Yes, sir.

Int. 11. Did he keep the hides that he made his rawhide lacing of in the lime any longer or to any greater extent in any other way than he did any other hides he was making other kinds of lacing of?

Ans. No, sir; just the same time.

Int. 12. How large was the building in which he manufactured the rawhide lacing, as near as you can fix it?

Ans. I can tell you exactly. It is one hundred feet by sixty. The first rawhide work he done in it.

Int. 13. How was the temperature of that building kept through the winter months—through the cold weather?

Ans. At blood heat or pretty near it. The place is all full of steam pipes.

Int. 14. So far as that building was concerned, was there any considerable variation in the temperature?

Ans. No, sir; the mornings were the coldest time. The rest of the time it was pretty hot.

Int. 15. Did you know of fulling wheels at Coupe & Co.'s to be used?

Ans. Fulling wheels? I told you that he put up one big wheel; I don't know whether you call it a fulling wheel or not. The fulling mill he had.

Int. 16. Did he have any wheels by which he treated leather other than those which have been mentioned?

Ans. Yes, sir; he had two for washing.

Int. 17. Did you ever know him to put any tar into those wheels with hides on any occasion?

190 Ans. No, sir.

Int. 18. Are you acquainted with the article made by Mr. Royer which he calls fulled rawhide?

Ans. Yes, sir.

Int. 19. Can you tell how that compares with the article which Mr. Coupe makes and sells as his rawhide lacing?

Ans. There is very little difference between the two. I don't know as there is any. Coupe's and Mr. Royer's is the only fulled rawhide that I know of in the market.

Int. 20. Were you acquainted with the different kinds of lacing that were on the market prior to the time that Mr. Coupe commenced making his rawhide lacing in which he used tar as a part of the stuffing?

Ans. I am thoroughly acquainted with lacing. There was none of it they ever used tar in.

(By Mr. EYRE:)

Int. 21. Were you acquainted with that lacing on the market?

Ans. Yes, sir.

Int. 22. Where did you know of it?

Ans. I know the lacing where I came from—Pawtucket, R. I., and Massachusetts.

Int. 23. You don't know what lacing was made in any other part of the United States?

Ans. No.

(By Mr. WHEATON:)

Int. 24. Do you know whether or not the rawhide lacing made by Mr. Coupe, in which he used tar as a part of the stuffing, was very much stronger than any other kind of lacing he had ever made prior to that time?

Ans. Oh, yes, sir; it was a great deal stronger; no doubt about that.

I wish to say that I made a mistake in my testimony the other day. I said that Coupe started in 1873 in the rawhide business. Well, it was after 1876 that he started. That is all that I can think of now. I was mistaken in fixing the date the other day.

(No cross-examination.)

JAMES MULLEN.

191 *Deposition of Nathan W. Spaulding.*

Direct examination by M. A. WHEATON, Esq., of counsel for complainant:

Int. 1. Please state your name, age, residence, and occupation.

Ans. N. W. Spaulding; fifty-eight years of age; residence, Oakland, California; occupation, saw manufacturer.

Int. 2. How long, if at all, have you used and been acquainted with the use of belts and belt lacing for running machinery?

Ans. Forty years.

Int. 3. Where were you born and raised?

Ans. North Anson, Maine.

Int. 4. Have you been working and using machinery in which belts and belt lacing are used for the last forty years?

Ans. Yes, sir. The original trade I learned was that of millwright.

Int. 5. When and where did you learn that?

Ans. In Maine.

Int. 6. Do you know Herman Royer, the complainant in this suit?

Ans. I do.

Int. 7. Did you know when he first produced the article and put it in the market which he calls fulled rawhide?

Ans. I knew it at the time. I don't remember the date.

Int. 8. What business transactions, if any, occurred between you and Mr. Royer with reference to that fulled rawhide?

Ans. He called my attention to it, and I used it in connection with my business and recommended it to others, and have used it from that time to the present. I recommended it and sold it for others to use.

Int. 9. Did you not act as agent in selling it to others?

Ans. The company of which I am a member, the Pacific Saw Manufacturing Company, are his agents, and have been ever since he first introduced it.

Int. 10. Prior to the time that Mr. Royer introduced that article

and showed it to you had you ever known any article on the
192 market which was named or called fulled rawhide or fulled leather, or by any designation of which the word "fulled" was a part?

Ans. No, sir.

Int. 11. I mean anything made of the hides of animals.

Ans. No.

Int. 12. Can you describe what different qualities, if any, were possessed by Mr. Royer's fulled rawhide as compared with any other belting or lacing which had been on the market anywhere in the United States before then?

Ans. It was stronger and more pliable than anything of the kind I ever used before or since. It is the strongest lacing and strongest belting I have any knowledge of.

Int. 13. Are you acquainted with the so-called fulled rawhide that are sent from the East and sold here in San Francisco in competition with Mr. Royer's.

Ans. I have used some of it and furnished it to customers, and on some occasions—I can't tell just when—I had fault found with it, and in some instances I have had it returned for not being as good as they had used. I have used some of it in belts and lacings and found it inferior.

Int. 14. In what respect were the fulled rawhides which were sent from the East inferior to Mr. Royer's?

Ans. They were not as pliable nor as strong; wouldn't stand the strain.

Int. 15. When you say that the fulled rawhides which were sent from the East and have been on the market here in San Francisco are not as strong and pliable as those of Mr. Royer's, do you speak of your own personal knowledge or from what others have told you?

Ans. Both.

Cross-examination by MANUEL EYRE, Esq., of counsel for defendants:

Cross-int. 16. Mr. Spaulding, what year was it when you first used and first saw this fulled rawhide of Mr. Royer's?

Ans. I don't know that I can tell you. I should think it is about fifteen years ago. I can tell very easily by referring to my
193 books. I know it has been fully that length of time. I know when Mr. Royer first started in the business. We used the first that he made, and from its superiority we got the agency of it.

Cross-int. 17. That was in 1869, wasn't it?

Ans. I cannot tell without going to my books.

Cross-int. 18. I wish you would look and find the year and have it inserted in your testimony.

Ans. That I will do.

Cross-int. 19. Was it as good then as it has been since?

Ans. Yes; I think so.

Cross-int. 20. There has been no change?

Ans. No; I think not.

Cross-int. 21. You have a memorandum in your books of your first purchase?

Ans. I think so.

Cross-int. 22. You went right along and bought the leather—the rawhide belting—from Mr. Royer, and also acted as his agent?

Ans. Yes; the company, of which I am a member, were his agents; personally I was not his agent. The Pacific Saw Company were his agents.

Direct examination resumed:

Int. 23. What are the names of the men who compose the Pacific Saw Manufacturing Company?

Ans. James Patterson and C. B. Sheffield.

Int. 24. Please state whether or not they had any difficulty in finding purchasers for Mr. Royer's fulled rawhide when you first put it on the market.

Ans. Well, it was like all those new things; it required an effort to introduce it; its merits had to be explained, tests made of it; we had the usual difficulties to introduce it. The manner of making that kind of leather in that way was novel; and to speak of it being full rawhide, it was something that was not understood or known. People that used the article couldn't comprehend the value imparted to the leather by making it in that way, it was such a deviation from the usual way of making leather or lacing.

N. W. SPAULDING.

194 *Deposition of Max Ott (Recalled).*

Direct examination by M. A. WHEATON, Esq., of counsel for complainant:

Int. 1. Mr. Ott, how long have you been in Mr. Royer's employ?

Ans. One year.

Int. 2. At what have you been employed by him?

Ans. Making rawhide and belting.

Int. 3. This fulled rawhide?

Ans. Fulled rawhide.

Int. 4. During that time how has Mr. Royer always unhaired his hides?

Ans. By sweating.

Int. 5. Can you form a rough estimate as to how many hides have been unhaired at Mr. Royer's by sweating since you have been there?

Ans. About five or six hundred.

Int. 6. Have there any been unhaired by any other process?

Ans. No, sir.

Int. 7. Has there been any difficulty in unhairing the hides by the sweating process?

Ans. None whatever.

Int. 8. During all that time has there a single hide been injured at Mr. Royer's by the sweating process?

Ans. No, sir.

Int. 9. Does the sweating process rot the hides?

Ans. No, sir; it does not rot the hides.

(No cross-examination.)

MAX OTT.

195 *Deposition of James Patterson.*

Direct examination by M. A. WHEATON, Esq., of counsel for complainant:

SAN FRANCISCO, *Jan.* 19, 1888.

Int. 1. Please state your name, age, residence, and occupation.

Ans. James Patterson; age, fifty-two; San Francisco; occupation, saw manufacturer.

Int. 2. How long have you been a practical mechanic and in the habit of using belting and lacing in running machinery?

Ans. I have used belting and lacing ever since I have worked at the business, both as an apprentice boy and as a journeyman. I started in 1848; I may say from that time. I was a journeyman in 1855, and was where lacing and belting were being used. Of course I didn't do much of it at that time. After I went into business for myself, of course we had to do more or less of it.

Int. 3. Of what firm, if any, are you a member at present?

Ans. Pacific Saw Manufacturing Company.

Int. 4. How long have you been a partner in that firm?

Ans. Since the first commencement of their business in 1865.

Int. 5. Where has been the place of business during all that time?

Ans. For the last twenty years it has been on Fremont street; previous to that time it was on Pine street, here in San Francisco.

Int. 6. Do you know Herman Royer, the complainant in this case?

Ans. Yes, sir.

Int. 7. How long have you known him?

Ans. About twenty years; I can't tell exactly; about that time. It may be eighteen, nineteen, or twenty years; I can't tell positively.

Int. 8. Do you know when the article which Mr. Royer calls fulled rawhide was first introduced into use in San Francisco?

Ans. Well, my impression is that it was about eighteen years ago; I can't tell exactly; it might be a little under. We were on Pine street previous to and during the earthquake in October, 1868.

196 When it was first introduced we were on Fremont street; I think it was somewhere about that time; it might have been a little before or a little later, but it was about that time that we commenced to handle it.

Int. 9. Was it as early as 1868?

Ans. Somewhere about that time. I know we were on Pine street in 1868; it was after that earthquake occurred. Without looking up the books I can't give you the exact date; my recollection is somewhere about eighteen or nineteen years ago.

Int. 10. What business arrangements, if any, were made between yourself or the Pacific Saw Manufacturing Company and Mr. Royer with regard to that fulled rawhide?

Ans. We first used some ourselves, then got a few hides and sides and sent them to our customers, and they gave good satisfaction. We then made arrangements with him to give us the exclusive agency of it and we would introduce it. I know that the arrangement was that we were to take a certain number of sides and hides per month and pay him for them, whether we sold them or not. We told him that he needn't *he* afraid of making a failure, the article was good, and that we were satisfied that we could introduce the article for him; there would be no question but that we could find a sale for them. He gave us the exclusive right, exclusive agency. We kept on selling it, and are selling it to-day. We don't claim the exclusive agency. How we came to agree to take a certain number of hides every month and pay him for them, he was in distress in relation to business matters; it was uphill business, and he was fearful of success; we felt that the article was good, and we were anxious to handle it; we could make something, and we could assist him by doing so.

Int. 11. Was there any other source from which such an article could be procured at that time except from Mr. Royer?

Ans. No, sir; not that I ever heard of.

Int. 12. Can you explain a little more fully what his fears were at that time with regard to making a failure of the business?

Ans. Well, it was the way I took it at the time—he had not the means to carry it on, and he thought to carry it on properly that he would have to charge more for it, and probably find trouble
197 in -oducing it, and in his conversation with us he thought that he would have to give it up; he didn't think that he could make a success in introducing the article; not but that he had confidence in the quality, but found it difficult to introduce a new thing into the market. We had already used it and found it good, and were anxious to get it introduced, anxious to give it to our customers.

Int. 13. What supplies, if any, besides saws, were you in the habit of furnishing to your customers?

Ans. Files, lace-leather, belting, Babbitt metal, planing knives, emery wheels. We always kept those articles to supply our customers.

Int. 14. What difficulties, if any, did you find in introducing this fulled rawhide to your customers?

Ans. We had no difficulty except the price. Parties said that they could buy for less money. The quality has always been good. I never handled anything that I handled with as much pleasure to ourselves as we have that.

Int. 15. How was it when you offered it to your customers who had never tried it?

Ans. I know in some cases they would object to the price, and in other cases they would take it on our recommendation. If they didn't find it as represented, they could send it back to us. We never had one sent back.

Int. 16. What name did Mr. Royer give to that article?

Ans. Fulled rawhide lacing and stamped it with his name. He had a trade-mark and stamped it.

Int. 17. Prior to the time Mr. Royer gave the name of fulled rawhide to his lacing and belting, had you ever seen any article of commerce made of hides to be called fulled rawhide or by any other name of which the adjective "fulled" constituted a part?

Ans. No, sir; I did not.

Int. 18. What, if any, different qualities did Royer's fulled rawhide possess from any other lacing that you had ever known up to that time?

Ans. We found it tougher, stronger, and more pliable. Of course, having those qualities would make it better than any other lacing.

198 Int. 19. Was it in fact, then, a new article and also an article with a new name?

Ans. It was, so far as I ever knew.

Int. 20. In what part of the States did you reside or work prior to coming to California?

Ans. I was in New York eight years, employed by R. Hoe & Co., printing-press and saw manufacturers of New York.

Int. 21. What years were you employed by Hoe & Co. in New York?

Ans. I went there in 1850 and remained there until 1858; then I came out here and worked for their agent in this city. I came here in October, 1858. I worked in Baltimore three years. There I was an apprentice and I didn't have my trade finished, and I went to Hoe & Co. and worked up to 1858. The same man was agent in Baltimore that was here and I came here to work for him. He is here now.

Cross-examination by MANUEL EYRE, Esq., of counsel for defendants:

Cross-int. 22. You say that it was in 1870 that you first used Mr. Royer's rawhide?

Ans. About that time, sir.

Cross-int. 23. Have you seen any difference in the manufacture of it since then?

Ans. There is a difference in the looks of it; it is a little clearer looking, but the quality is the same. It had a little darker appearance in the first place. The quality is the same.

JAMES PATTERSON.

Deposition of Herman Royer.

Direct examination by M. A. WHEATON, Esq., of counsel for complainant:

Int. 1. Mr. Royer, you are the complainant in this case, are you?
Ans. I am.

199 Int. 2. And you have already given some testimony in this case?

Ans. I have.

Int. 3. Have you read a copy of the testimony of the defendant, William Coupe, given in this case?

Ans. I have studied, with some difficulty, the deposition, analyzing both that which is presented as facts and that which is presented as theories. I find that Mr. Coupe is trying to establish mainly three positions. The first is Coupe's alleged invention of superliming hides, which is represented to be far superior to sweating. The second position is that Coupe, in the production of fulled rawhide, used one or two said to be substances for tar. The third position is that Royer was certainly anticipated in the production of fulled rawhide by both Davis and Coupe and inferentially by very many others.

Int. 4. What were your difficulties in reading Coupe's testimony?

Ans. In trying to read understandingly I was troubled with a confounding of terms that produced a confusion of ideas. I also met with statements that are contradictory to universal natural law and contradictory to his own statements.

Int. 5. What terms were confounded by Mr. Coupe?

Ans. The principal terms were almost throughout misused in a manner that confusion is unavoidable. For instance, the terms tanning, tawing, fulling, curing, currying, and others are constantly misapplied. Mr. Coupe and his witnesses have at some place established the meaning of these terms, and I insist that these meanings should be maintained, or otherwise it is impossible to give a rational or intelligible answer to his testimony. Mr. Coupe lays down three fundamental principles of preparing hides, which, for convenience, I will accept as a base to start from and to stand by. They are tanning, tawing, fulling. Tanning is only accomplished by tannin, a vegetable substance that forms an insoluble substance with the hide, as Coupe says in answer — Int. 16. The second principle is that of tawing by means of mineral substance, such as salt and alum, as Coupe states in his answer to Int. 16. The third

200 principle is fulling, a mechanical operation, and generally assisted by water or fats and various compounds. In explaining the third method, in his answer to Int. 16, Mr. Coupe employs a simulation for further designs. There are combinations of these principles, creating thereby other methods; but to speak of mineral tanning, as Mr. Coupe does in answer to Ints. 10, 16, 19, and others, or to speak of chemical tanning or mechanical tanning is misleading, as it is to make a distinction between tawing and

mineral tanning, as Mr. Coupe does in his answers to Ints. 16, 19, 34, and others; chemical process, also tawed leather, in answer to Int. 19.

Int. 6. What other terms are there for the meaning of which you desire a definition?

Ans. I would say that the terms stuffing, fulling, curing, and currying are misapplied to create improper meanings, and leave room for a suspicion of intentional linguistic legerdemain; for it is difficult to assume that these things were done for want of intelligence. Stuffing is a very simple operation, based upon the physical principle of capillary attraction. The simplest form of stuffing is the one most extensively used. It consists in smearing a fatty compound on one side of a wet and tanned hide and suspending the same to dry. As the water goes out on one side by evaporation so does the fat enter on the other side by capillary attraction. Fulling is a mechanical operation more or less forcible, such as stretching, compressing, rolling, or twisting a hide, effecting thereby a separation or loosening of the fibres of which a hide is composed. Fulling and stuffing are two distinct operations, which are carried on, either by choice or necessity, according to circumstances, separately or in combination. There is, for instance, a great amount of most intense fulling required as a distinct, essential, and novel operation, unknown of before my discovery of preparing a fulled rawhide, and this fulling operation is named by Mr. Coupe stuffing, it seems to me, to cover up by this term the chief operation, the end and object. I am referring to his answers to Ints. 16 and 52. I call attention that the mere introduction of grease, say the saturation with oil by fulling, makes no leather. Fulling may be resorted to to wash or to soften hides, either raw or prepared. It may be applied to remove substances from hides or to introduce substances into them. Before
201 my method of fulling rawhide, fulling was always practised upon wet hides, while my fulling is upon dry hides. The fact is that water both enters and leaves a raw or prepared hide in either state sooner than the compound, and it is an additional fact that water repels fat. These physical laws, properly taken advantage of, constitute, with the mechanical appliances, the factors to the fulling. The term "currying" has but one distinct meaning—to preserve, as Mr. Coupe stated in answer to Int. 53. It is nonsense to say a hide is cured by fulling or cured by stuffing it with tallow, as Mr. Coupe says at the latter end of his answer to Int. 16 and his answers to Ints. 25 and 27 and others. Mr. Coupe has defined, in answer to Int. 13, fulling and stuffing. The misuse of these terms and others, to the end of muddling up the question, involves upon me the task of wasting time by writing a volume in answer. Curing is effected by antiseptic substances, by tannin and tanning, by alum and salt or other minerals in tawing, by tar in making fulled rawhide.

Int. 7. What is the distinction between your process of fulling and that of tanning and tawing?

Ans. Fulling is a mechanical process, tanning and tawing are chemical processes. Tanning and tawing are wet operations, full-

ing is a dry method. In tanning and tawing the dehaired hide is introduced into a liquid solution of either tannin or alum. A most intense affinity exists between these substances and the prepared hide. These substances respectively combine with or settle upon the fibres of the hide and produce thereby leather—that is, preserve it against putrefaction and cause lasting pliability. Chemical affinity is the working principle in tanning and tawing. The principles in fulling have been above explained. During tanning and tawing a good deal of water is absorbed; during fulling, as I carry on the same, a small amount of water in the form of vapor is expelled; the fluid tallow and admixtures, kept fluid from mechanical heat, enter. The fulling in my case is finished as the hide has dried out, but the fulling, as practised before my method, was upon wet soft leather and upon soft hides.

Int. 8. Would you not call any hide that has been fulled a fulled rawhide?

202 Ans. I would not. In that sense thousands or millions of hides which are fulled before liming or sweating could be called fulled rawhide. That some kind of fulling has been done upon a rawhide does not make it a fulled rawhide in the sense that I have named the article. The distinguishing feature is that by fulling alone, exclusively, hides are made permanently and thoroughly soft and of a strength and durability for mechanical purposes never before or after equalled by any other process.

Int. 9. Is not any leather—glove leather, chamois, some kinds of pocket-book leather—pure fulled rawhide, as Mr. Coupe claims in his answer to Ints. 31, 235, and 236?

Ans. It is not; but I prefer to go over Mr. Coupe's testimony, not seriatim, for by answering the conglomeration of disjointed and incoherent simulations and dissimulations I would hopelessly increase confusion. For the sake of order and perspicuity I will go over Mr. Coupe's testimony from the beginning of the process instead of from the end. I thought a definition of terms and processes essential before entering the subject in proper succession.

Int. 10. You would then start from the beginning, the difference between liming and sweating?

Ans. I would state that Mr. Coupe means to represent sweating as a rotting process in his answer on the upper quarter of page 96, answer 145; also upper third line, page 72, in his answer 64, defective in every respect and inferior to superliming, Mr. Coupe's alleged invention for purposes of making fulled rawhide.

Int. 11. Is sweating not a rotting process?

Ans. It may turn into one, but it must not. Sweating is a process of fermentation, a series of metamorphoses, not yet well understood by scientists. Many thousands, if not millions, of hides are annually sweated in the United States for the express reason that sweating is more conservative than liming. It is admitted that sweating requires more intelligence and faithful attention, for the want of which greater loss may ensue than from careless liming. Hair, however, never rots off the hide, as Mr. Coupe says in his answer 62 and 145, on upper page 96; but the hide will rot off from

the hair, for hair is the most indestructible part of the hide. In sweating the root is affected, like from scalding that does not
203 burn the hide. All hay, grain, raisins, dried figs are sweated. They naturally sweat; they may rot, but not necessarily so. The flour of unsweated wheat will sweat in the sack or barrel, hardly ever with any injury therefrom; and in the successive stages of fermentation of saccharine liquors there may be vinous and ascetic fermentation, or there may be musick and butyric fermentation, the last yielding a product of disagreeable and foul smell, but the foul fluid is not the first change or necessarily the last. A man may lose his hair from continued sweating under his hat. The roots are affected, but the hair does not rot nor does his scalp. Good and carefully sweated hides retain in my factory so perfect an exterior that they cannot be distinguished from the unsweated except by a test upon the hair, and after simply washing the dehaired hide not a trace of taint can be detected.

Int. 12. Does not sweating retain gum or foreign substances, as Mr. Coupe says in his answer to Int. 60?

Ans. Gum or anything sticky never exists in a sweated hide. It is not in a fresh, salted, or in a dried hide. Sweating does not produce it, nor does rotting. Albumen and fat are not foreign but natural to a hide. This gum is an invention of Mr. Coupe's—invention No. 1.

Int. 13. Does not a sweated hide, as Mr. Coupe says in answer to Int. 72 and elsewhere, contain substances (fat, scud, albumen) that form into an insoluble cement?

Ans. It never does. It is a physical impossibility; but limed hides not drenched in a bate and not soured in sulphuric acid will dry into an almost rock-like substance. Lime, caustic lime, slacked lime, so-called quicklime, the kind that is here in question, forms, with albumen, caseine, or blood, the basis of various cements that are absolutely insoluble in water.

Int. 14. Does not, as Coupe says in answer to Int. 145 and elsewhere, the sweated hide agglutinate on account or in consequence of fat not having been removed?

Ans. If Mr. Coupe's story of agglutination were in any event justified by facts, the presence of unremoved fat would prevent agglutination instead of causing it; but there exists no glue in any hide. The adhesive quality of glue is the result from long-
204 continued boiling. Before boiling hide substance is not adhesive. This agglutination in a hide is an invention of Mr. Coupe's—invention No. 2.

Int. 15. In his answer to Int. 63, Mr. Coupe says that liming a hide leaves nothing but pure fibre and gluten. Is this so?

Ans. The presence of gluten in a hide is an invention of Mr. Coupe's—invention No. 3. Gluten is a vegetable substance found in many grains. It is never in a hide.

Int. 16. Mr. Coupe insists that by liming hides so many impurities are removed from the hide. What have you to say to this?

Ans. The impurities that Mr. Coupe claims to remove from the limed hide are nothing but removed hide substance. Mr. Coupe

uses caustic lime, the only form in which tanners use lime. Its characteristic is to disintegrate animal tissue. I contend the lime combines (does not dissolve, as Coupe asserts) with the albumen. It also corrodes the fibres, impairs them, as Coupe maintains in his answer to Int. 73. When these new substances, chemical compounds, are removed, they diminish unavoidably both the quantity and the quality of the hide. The removal of these so-called impurities proves as little to the superior strength and soundness in a hide as a running sore would prove the soundness and strength of the afflicted body from which the running exudes. Sweating may disintegrate at the end; liming must disintegrate from the beginning; and if the lime liquor is not kept caustic enough by sharpening the same up with additional new lime, as every tanner does, then the old will turn into a putrefying liquid, throwing out ammonia in quantities.

Int. 17. Mr. Coupe claims, in his answer to Int. 81, the superliming of hides for another purpose than that of dehairing only as an invention of his not known before. What is the fact?

Ans. Superliming, or liming for other purposes than that of dehairing, has always been known by tanners of general experience, and it is to-day practised annually on many thousand-, if not millions, of hides. The object of superliming is to produce both thick and porous leather, without much regard for tensile strength.

Int. 18. In his answer to Int. 149 Mr. Coupe declares the sour from sulphuric acid and the drenching with manure that precedes it minor operations that may well be left out. Is this so?

Ans. Mr. Coupe may as well deny his own existence as to
205 deny the necessity to remove or neutralize lime in order to substitute therewith sweating. Mineral acid of some kind is the preferable remedy to dissolve the lime. To a tanner, the entire or partial removal of the lime for the production of good leather is as or more important as is the removal of the hair. But the removal of lime for fulled rawhide is still more important, for the reason that the unsoured hide will dry so hard before fulling as to verge on brittleness when in the dry condition required for fulling. As to the remark of Mr. Coupe in connection with the above statements that soft water may obviate either or both the drench and the sour, as Mr. Coupe says in his answer to Int. 149, page 99, I would say no soft water has that chemical effect essential upon the limed hide. As Mr. Coupe has stated in his answer to Int. 75, and truthfully, liming is a chemical process; the caustic lime is turned into carbonate of lime. This requires an acid to dissolve the compound.

I maintain my position taken in the patent, certain of no contradiction of chemists or writers of acknowledged authority or of practical workmen.

Liming the insoluble combination of lime and hide must be superseded by souring necessarily, and preferably souring should be preceded by drenching to substitute sweating.

Chemical facts may be abjured—they cannot be removed.

The stench of which Mr. Coupe speaks at the end of answer to Int. 149 that is to be cured by sulphuric acid and the additional

carbolic acid of which Mr. Coupe speaks at the end of answer to Int. 64 betray the taint and weak condition of hides resembling those that are excessively sweated.

Int. 19. In answer to Int. 73 Mr. Coupe declares liming and drenching equivalents for the removal of hair only. Is this correct?

Ans. It is not. Liming is for removing the hair, and drenching and sour to remove the lime.

Int. 20. Mr. Coupe affirms in his answer to Int. 195 that thorough liming a hide obviates the necessity of tar, as rats will not eat limed hide. What is the fact?

Ans. The question and its answer are conditioned upon partial tanning or tawing and is outside the question in issue. But, as a fact, I know of alum-tawed leather that had been limed being
206 eaten by rats or mice when such leather was kept for sale in a store. I have been assured by a tanner of wide experience, Mr. Funke, and many years before this controversy commenced, that a slight amount of sulphuric acid, Coupe's sour, will turn rats from such rawhides.

Int. 21. In his answer to Int. 80 Mr. Coupe says that sweated hides may either rot or burn. What is your opinion?

Ans. This is a hypothetical judgment of Mr. Coupe's. The salt that is supposed to have been unnecessarily left in a hide will attract moisture, but whether this moisture will contribute more to decay as the salt will preserve I am not now able to determine. The other statement that the remaining fat in the sweated hide is tending to heat is certainly no fact. Only drying oils—rapidly drying oils—will heat, such as fish oil and linseed oil, in the process of absorbing oxygen, called oxidation. The fats from cattle, tallow and oil, do not dry, or not rapidly enough to accumulate heat.

Int. 22. In his answer to Int. 55 Mr. Coupe says a sweated hide will get hard in consequence of the fatty matter not having been removed. Is this true?

Ans. This is not true. It is one of Mr. Coupe's straw theories, brought out to swell the bulk of testimony and to befog the questions in issue. If Mr. Coupe says in answer to Int. 55 the hides will get hard, he says in answer to Int. 52 that they will get soft in consequence of the very same cause, the fatty matter, with this difference, that the grease in question is introduced or supposed to be, and in answer to Int. 55 the grease is supposed to be in the hide naturally. The real fact is that grease in all cases will soften the hide or leather, and more so when intergrown with the fibres; but while answer to Int. 52 contains one truth, it also contains, although covering only half a line, an untruth. It (grease, tallow, oil) cures the hide—preserves it. This is not true. Fatty substances have no antiseptic properties. Fat does not preserve, as Mr. Coupe states in answer to Int. 52 and many times elsewhere.

Int. 23. In his answer to Int. 11, page 59, Mr. Coupe speaks of "mulling" tawed leather. Do you understand what that means?

Ans. It means moulding, a process of fermentation, and it is

similar to sweating, to which tanned leather is sometimes subjected, preparatory to stuffing.

207 Int. 24. In his answers to Ints. 74, 137, 138, 139, 219, Mr. Coupe reiterates that superliming a hide for purposes other than dehairing was neither known to nor required by tanners. What is the fact?

Ans. There are now annually millions of hides put in lime liquor for weeks even after the wool or hair has been removed, and this has been done for generations. I know that tanners know of the purpose and the effect of superliming, and I emphasize that the knowledge, care, and labor to remove the lime exceed by far that of removing the hair.

In this invention of Mr. Coupe's, the fourth, as he calls superliming, I see no "broad, distinguishing feature," which are his own words in answer to Int. 19, upon page 151. I would say, in conclusion, that liming has a double effect. The first is to disintegrate, eat out some substance; the second is to petrify. By not removing or not neutralizing lime, as is done to a degree in some leather, the effect of petrifaction is permitted to exist without objection. The presence of lime in some leather—harness, shoe, or lace leather—is absolutely destructive.

Int. 25. Since caustic lime acts corroding upon animal tissue from its first contact therewith, as authorities agree, and since by longer-continued contact with caustic lime the entire substance of the hide is impaired still further, as Mr. Coupe admits in answer to Int. 73, how would you ascertain that certain degree of which Mr. Coupe speaks in answer to Int. 73, and that discovered degree in answer to Int. 202, where superliming produces no impairing results?

Ans. To ascertain that degree is to me a conundrum. Mr. Coupe calls it a secret in answer to Int. 203. To Mr. Coupe that degree must appear imaginable, but it is a physical impossibility. This is an impossibility of the same kind as the one stated by Mr. Coupe in his answer to Int. 140, page 92, below, that liming is not injurious, and his admission in answer to Int. 73 that liming is injurious.

Int. 26. We have now examined Mr. Coupe's attitude in what you have pointed out as his first position, superliming. Please
208 tell us about his use of paraffine on rawhide which he has superseded with tar.

Ans. Mr. Coupe speaks both of paraffine and of paraffine oil which he has been using ever — from 1865 to 1881 or 1882, although on June 9, 1881, I saw and smelled throughout his extensive establishment wood tar stuffing on fulled rawhide. Now, paraffine is a solid substance, paraffine oil is a fluid. To judge from Mr. Coupe's answer to Int. 131, he used the solid paraffine and resin and beeswax to solidify the "loose and soft flanks" of his fulled rawhide, which no doubt became loose from superliming, the caustic lime having destroyed so much hide substance. But in answer to Int. 88 Mr. Coupe speaks of paraffine (not paraffine oil) as a fluid, and in answer to Int. 120 as an undesirable fluid in warm weather, hav-

ing opposite qualities at the same time; fluid and penetrating in answer to Ints. 88 and 120, but solidifying in answer to Int. 131. And, again, the paraffine of which Mr. Coupe speaks here in these answers as a fluid cannot have acted as a fluid, rendered fluid from a solid by extreme heat, for the acknowledged melting point of paraffine ranges from 112° to 180° Fahrenheit, a temperature much higher than either the one at which tallow melts or the temperature that Mr. Coupe allows his fulling to attain from 60° to 90° Fahrenheit, as he says in his answer to Int. 199, on page 106. How this paraffine can act and is intended to act permanently as a solid (Mr. Coupe's answer to Int. 133) in any imaginable case as a fluid or as a substance causing fluidity at a temperature below its melting point, as Mr. Coupe represents in his answers to Ints. 88 and 120, I do not know. The solid paraffine makes the limpid tallow more soft, swears Mr. Coupe.

Int. 27. Would paraffine or paraffine oil keep off rats and mice?

Ans. Paraffine and paraffine oil is inodorous and tasteless, a most harmless and inoffensive substance, entering largely into the finest cosmetics, some of it under the name of vaseline. I do not think that such a most inoffensive material will repel rats when the hide and fat attract them; it takes something stronger.

Int. 28. In his answer to Int. 88 Mr. Coupe ascribes preserving qualities to paraffine wax and says that it prevents moulding. What have you to say to this?

209 Ans. In the manner as bees-wax is used for sealing up fluids to exclude the air, and therewith the germs of fermentation or putrefaction which are supposed to float in the air, paraffine may preserve like tin solder, but it has no antiseptic qualities like tar, charcoal, salt, alcohol, sulphuric acid, or carbolic acid, tannin, alum, and others.

Int. 29. Mr. Coupe, in his answer to Int. 122, says he discontinued the use of paraffine on account of its disagreeable smell. What is the fact?

Ans. As before stated, paraffine and paraffine oil have no smell. That which I have bought and used and otherwise seen and about which and its manufacture I have read in Roscoe and Schorlemmer's treatise on chemistry in Encyclopædia Britannica, in Wagner's Chemical Technology, has no smell.

Int. 30. Is, then, paraffine or paraffine oil a good substitute for tar?

Ans. It is not. The paraffine story of Mr. Coupe ranks with his other inventions. This is invention No. 5.

Int. 31. Did you not say in your answer to Coupe's testimony, with regard to his patent which calls for paraffine stuffing, that paraffine was a substitute for tar, while now you say it is no substitute?

Ans. Knowing that paraffine was an educt from wood tar first, and knowing further the necessity of using some antiseptic or at least some repellent or mechanically softened rawhide, I had no doubt and it has been proven (I saw it myself in 1881) that Coupe was using either or both an antiseptic or repellent, but hiding them

under a misnomer. Of course, my difficulty to answer a dilemma is plain, because what Coupe does is not what he says he does. He uses no substitute; he uses tar, and paraffine proper or paraffine oil proper is no substitute for tar. Since my first answer I have posted myself thoroughly on this point.

Int. 32. In his answer to Int. 102 Mr. Coupe declares the functions of tar on tanned leather and on rawhide are alike. What is your knowledge?

Ans. If the proper meaning of the term "function" is permitted as a specific appointed action, then this is not so. In tanned
210 leather there is no need to keep off rats or mould or to preserve from decay. The tannin does this in a most perfect manner. It is both an antiseptic and a repellent.

Int. 33. In answer to Int. 133 Mr. Coupe says that tar is not absolutely essential to either fulling or fulled rawhide, and not one-tenth part of fulled rawhide in the United States has tar or its equivalent in it. How can you account for this?

Ans. If fulled rawhide improperly comprises all such products, as Mr. Coupe and his witnesses swear to, then Mr. Coupe may be right; but if my most distinctive process is understood, then Mr. Coupe is not right. Not one of the various infringers omits the tar or its equivalent. Nineteen-twentieths of all manufacturers, including Mr. Coupe, use tar; the balance struggle along with a substitute. Mr. Coupe runs about eighty machines; the St. Louis and the Chicago infringers and myself use about twenty more. All these use tar, and about four machines struggle along with substitutes; but the great quantity of fulled rawhide that Mr. Coupe and his witnesses swear in I can show do not belong to this class.

Int. 34. In his answers to Ints. 28, 29, 30, 31, and further on by witnesses (we are coming now to Mr. Coupe's third position—anticipation), Mr. Coupe swears that fulling rawhide and fulled rawhide was both a well-known process and a well-known product. Can you answer this statement? That is contradictory to yours.

Ans. I can. If Mr. Coupe gives a different construction or meaning to the same term he may be right. There are annually many thousand rawhides fulled before the hair is taken off and after the hair is taken off. The bulk of these rawhides that are fulled with the hair on is later on tanned and some of them or very many are tawed, but they are not fulled rawhide, and no one would or does call them fulled rawhide honestly, because the leather-making principle is not fulling but tanning, or, as the case may be, tawing. Still, to take the benefit of a play with words, these hides may be called fulled rawhide.

As regards chamois leather, glove leather, army leather, some kinds of bag and pocket-book leather, these things have been made, I understand, for many years prior to the birth of any living
211 man by stuffing fish oil onto them and to full them in the fulling stock in a wet or complete soft condition.

They are after awhile taken out again, dried some, again stuffed with fish oil, and again fulled.

This process of stuffing, fulling, and drying is perhaps repeated

half a dozen times, until such hides are fairly filled with fish oil. It must be oxidizing, rapidly drying oil.

An extensive business has been and is still *is* done in this leather.

A large portion of army leather, bandoleer leather, chamois leather, and so-called wash leather is manufactured upon this process. Good steer hides, as well as almost worthless sheepskins, are used; the latter, when finished, for cleaning windows or polished furniture, the former for any purpose. They are, as Coupe says in his answer to Int. 31, "glove leather," "substantially" the same; but like tanned and tawed leather nobody calls them, and they are not fulled rawhide, because the mere fulling and filling up with fish oil makes no leather and is not the leather-making principle, as is the case with fulled rawhide in question.

It takes a chemical process to make this glove leather.

The presence of a chemical process in the one case and the absence in the other constitute the distinction that is important enough as not to have been omitted in the considerations of Mr. Coupe and his witnesses.

After the fulling of fish oil is finished the oil-saturated skins are thrown in a pile and allowed to heat, which sets in in a few hours. To guard against destruction from overheating, the pile is rapidly thrown down and again rebuilt. This is repeated several times. The smell of the evolving gases guides the workmen when to quit. This chemical process, which is nothing but combustion without light and with but a low degree of heat, is known by the term of "oxidation."

The evolved heat and the arising gases emanate at the expense of the fish oil and of the hide substance.

It is agreed by professional men that a part of the fish oil is irremovably chemically incorporated into the hide. The balance is washed out by a potash or soda lye.

Not only is there a fundamental difference in the process, a simple inspection presents a radical difference in the products. In
212 consequence of the practised oxidation, the tensile strength of the fulled rawhide that Mr. Coupe manufacturers now, and that which he and his witnesses swear to have manufactured at Davis's and to be alike, is greatly to the disadvantage of the latter.

A velvety extreme softness for personal comfort is the determining requisite in the one product; an extreme native tensile strength, unimpaired for mechanical stress and strain, is the other. There is no compromise between the opposite qualities of the respective products.

The consumers of the one would reject the other as a fraud. Mr. Coupe knows this himself better than I can explain. Both in his patent and in answer to Int. 10 Mr. Coupe speaks of superior tensile strength, and he knows of the comparative inferior strength of glove leather, and all that is substantially the same.

Int. 35. In his answer to Int. 250 Mr. Coupe says that Royer does

not depend on any particular machine for fulling; the fulling can be done on any machine. What is the fact?

Ans. Mr. Coupe has testified in his answer to Int. 47 and in his answer to Int. 250, page 117, of inventing five machines for fulling pure rawhide, not counting those that he swears to have used at Davis's and previous to his sixth machine, which a Boston jury declared my invention. All these five machines, I understand, from Coupe's testimony and otherwise, to have been dead failures. The process did not work with them. It has not worked and cannot be made to work on fulling stocks, as I have satisfied myself on that point at Hellwig's. Mr. Coupe could not make the drum, which he especially built for that purpose, do the work.

Another infringer, Mr. Cook, in San Francisco, who was once a defendant, had some partial success by using potash in conjunction. I have no doubt, I feel certain, that other and entirely new machinery can be invented that will certainly do the work; but so far none of the several infringers have troubled themselves with new things. They all, including Mr. Coupe, have copied my mechanical invention, the machine, and they, including Mr. Coupe, have also copied my technical invention, the process. It is a feature of Mr. Coupe's defence that the machine—any machine—is the essence of
213 manufacturing fulled rawhide; but when the machine was up for adjudication it was the process that was the essence of the invention.

(Mr. EYRE: Mr. Reporter, make a memorandum that the foregoing testimony of Mr. Royer was written out by him, question and answer, as his testimony in this matter.)

(By Mr. WHEATON:)

Int. 36. The foregoing testimony has been read by question and answer from manuscript. Who prepared those questions and answers?

Ans. I prepared those questions and answers.

Int. 37. Did you do it entirely by yourself, without assistance or suggestion whatever from your counsel?

Ans. I prepared them without suggestion or assistance from counsel or other person.

Int. 38. And do you know, of your own knowledge, it to be entirely true?

Ans. I know, of my own knowledge, it to be entirely true.

(Complainant's counsel here produces and puts in evidence a number of exhibits marked by the respective letters of the alphabet from A A to K K, with the exception of the letter I, which is left out.)

Int. 39. Please look at Exhibit A A and state what that is.

Ans. Exhibit A A is a piece of dried rawhide cut lengthwise from near the back of a hide that has been dehaired by the sweating process. It shows the marks of the rats, the hide having been laying in my shop for years.

Int. 40. Please look at Exhibit B B and state what this is.

Ans. Exhibit B B is a piece of the same hide cut crosswise farther down the belly, partly showing the contracted condition of the hide, the bending and wrinkles.

Int. 41. How long have Exhibits A A and B B been in existence in their present condition?

Ans. I think they have been in my shop about five or six years—that much or more.

Int. 42. What is Exhibit C C?

Ans. Exhibit C C is a piece of rawhide cut lengthwise from a hide that had been dehaired by the liming process preparatory of the oak-sole tanning, taken from the tannery of Mr. Duncan pre-
214 paratory to going into the liquor, the lime in it having been removed by washing and working it over the beam.

Int. 43. What is Exhibit D D?

Ans. Exhibit D D is a piece of rawhide, dehaired by the liming process at Mr. Duncan's, cut from a hide when it was ready to be dehaired, showing the effect of lime upon the fat of the hide.

Int. 44. What is Exhibit E E?

Ans. Exhibit E E is a piece of fulled rawhide from a medium light steer hide, cut from near the back behind the horns.

Int. 45. Is E E a piece that has been finished by your process?

Ans. It has been made leather, but no other work done to it. It has been fulled in the machine, but not stretched and finished afterwards. It is a piece that has been fulled in my machine by my process, but no other work for the purpose of lacing or belting has been done upon it.

Int. 46. What is Exhibit F F?

Ans. Exhibit F F is a piece of leather coming from the same hide, being cut parallel to E E, within an inch or two of E E, and having been prepared at Mr. Hellwig's glove-leather factory in his process of soap tanning, which he applies to sheepskin and buckskin, the process being the same, the end of it showing substantial thoroughness upon a heavy hide, although the same kind of labor applied to lighter skins makes excellent leather.

Int. 47. What is Exhibit G G?

Ans. Exhibit G G is a piece of fulled rawhide lacing, manufactured in my factory by my patented machines and patented process. It is a portion of a finished hide, and, to the best of my knowledge, it is a good many years since it was made—maybe six or eight years.

Int. 48. What is the Exhibit H H?

Ans. Exhibit H H is a piece of deerskin dehaired by the sweating process and softened in my patent fulling machine without the use of tallow and tar.

Int. 49. What is Exhibit J J?

Ans. Exhibit J J is a deerskin dehaired by the sweating process, softened by my patent fulling machines and patent process, including tar.

Int. 50. What is Exhibit K K?

215 Ans. Exhibit K K is a piece of deerskin tanned on the principle of chamois leather for the purpose of gloves; tanned at Hellwig's tannery in the same process as ordinary glove leather is tanned. The skins are dehaired by liming, fulled in oil, but permitted to oxidize, and the surplus of the oil being removed by soda solution.

Int. 51. Now, returning to Exhibits A A, B B, and C C, do you know how the break occurred which is shown in Exhibit C C, the piece that was unhaired by liming?

Ans. I know that the lime is still in this piece. Being petrified makes the hide brittle, no bating having been done on this piece.

Int. 52. Will Exhibit A A or B B—two pieces which were unhaired by sweating—break if they are bent, the same as Exhibit C C was broken when it was bent?

Ans. I haven't tried it. I believe it will not.

Int. 53. Have you bent others like that?

Ans. I have.

Int. 54. What was the result?

Ans. They did not break.

Int. 55. Is there any difference between Exhibit A A and B B and the Exhibit C C, which would cause the latter to break while the former would not, other than the fact that Exhibit C C was unhaired by the use of lime?

Ans. No other cause that I know of. It is that fact that has prevailed upon me to abandon liming as an unsuitable process.

Int. 56. Is the fact that a hide will break by the total separation of its fibres, as shown in Exhibit C C, one of the usual effects which is produced by incorporating lime into a rawhide?

Ans. It is, unless the lime is removed or the effect neutralized.

Int. 57. How long has that been a well-known fact, to your knowledge?

Ans. I know about twenty years positively.

Int. 58. Please look at Exhibit D D and state what effect the lime has had in the fat in that piece.

Ans. It does not remove it or destroy it. When I first had that piece the lime looked dried up on the surface, but from lay-
216 ing in my office for a month or two the fat has come to the surface—shows itself.

Int. 59. When were Exhibits C C and D D prepared?

Ans. About two months or three, I don't know which; little less or little more.

Int. 60. Months from now you mean?

Ans. Yes, sir. When the probability of taking testimony was spoken of these pieces were prepared to see whether or not lime will eat the fat in a hide. I always thought that lime has some effect upon fat, but it does not destroy it altogether, I know from experience. I know that oak-tanned leather shows the effect of fat hides in the finished product; and in conversing with Mr. Duncan upon this fact he told me that many tanned hides, after being limed and tanned, could, by severe pressure, have the natural fat squeezed out of them. He said that when he was working in New Jersey in

the factory where he made glossy leather for carriage tops, they were frequently troubled by the fat remaining in the tanned hides that they were using.

Int. 61. You speak of oak-tanned sole leather showing the fat after the leather was finished. How much more is lime used in sole leather?

Ans. I think about the same amount—enough to take the hair off; and in some instances they lime more for the purpose of making loose leather.

Int. 62. Take Exhibits E E and F F. State when they were manufactured.

Ans. Well, they are about, I should judge, two or three months old.

Int. 63. Where were they manufactured?

Ans. I have stated where Exhibit E E was manufactured—in my factory—and Exhibit F F in Mr. Hellwig's tannery.

Int. 64. Are they both different processes of the same original hide?

Ans. I have stated that they came from near the same place, being cut parallel from the same hide.

Int. 65. Do you know whether or not Exhibit F F was treated in a fulling machine or not?

217 Ans. It was treated by fulling stocks.

Int. 66. Was it treated in the ordinary way that buckskin is treated in the fulling stocks?

Ans. They gave it extra more treatment in the same manner.

Int. 67. What do you mean by extra more treatment?

Ans. They gave it such pounding as to make it, in their judgment, thorough leather.

Int. 68. Of those two exhibits, E E and F F, which is the softer and more pliable?

Ans. Exhibit E E is thoroughly soft, the same manner as all hides of similar character would be if treated in my machine by my process.

Int. 69. As hides had always been treated in the fulling stocks and are yet, do you know whether they are made soft and pliable by saturation with some kind of fluid before they are placed in the fulling stocks?

Ans. They have always been saturated before they came to the stocks, either with water or soapsuds or some saturating fluid.

Int. 70. When they are placed in the fulling stocks, or any kind of milling machine, so wet with either water, soapsuds, grease, or anything else that they are soft and pliable, will any amount of mechanical action while they are in that condition loosen the fibres?

Ans. It will not.

Int. 71. Is it absolutely necessary, in order to loosen the fibres to soften a hide by mechanical action alone, that the hide shall be so dry that the tanning of it will loosen the fibres?

Ans. That is what is essential; that constitutes the essence of my invention.

Int. 72. Is it one of the necessary steps in the practice of your process that the hide must be in that dry condition, or so nearly dry, that the fibres will be loosened from each other mechanically by the operation of the machine?

Ans. It is.

Int. 73. Do the Exhibits E E and F F illustrate the difference between a hide that has been softened by the loosening of the fibres on account of milling it in a nearly dry condition and a hide
218 that has been thoroughly treated by mechanical action in the ordinary manner in a fulling machine?

Ans. They do.

Int. 74. Has it always been a well-known fact that grease or oil of any kind would make any kind of a hide or any kind of leather soft so long as it remained saturated with grease or oil?

Ans. It is a well-known fact.

Int. 75. When hides have been softened by working grease into them in a fulling mill, has that softening come from the mechanical action or has it come from the saturation of the hide with grease?

Ans. I don't understand in what condition the hide is supposed to have been.

Int. 76. I am speaking about the hides as they have been treated in the fulling stocks, as testified to by Mr. Coupe, in which he says the hides were put into the fulling stocks and grease worked into them. My inquiry — whether, in such cases as he has testified to, the hide was softened by separating its fibres by mechanical action or by the grease which was worked into it.

Ans. It was softened by the grease, not by mechanical action.

Int. 77. In that respect are those processes which he has testified to, in which the hide was softened by working grease into them in the fulling stocks, entirely outside of your process?

Ans. They are entirely outside of my process.

Int. 78. Did those processes make the same kind of an article as your process, made from the same kind of a hide?

Ans. They did not.

Int. 79. Could you produce, or could anybody produce, an article which you have manufactured and named fulled rawhide by those processes which Mr. Coupe has testified to, where grease was worked into a hide in the fulling stocks?

Ans. Nobody could.

Int. 80. Exhibit H H, you say, is a deerskin made by your process, except that there is no tar in it. How does that compare with buckskin made by the process described by Mr. Coupe?

Ans. The buckskins described by Mr. Coupe have been limed; the one made by Mr. Coupe is loose and spongy, while the other one is firm and solid.

219 Int. 81. Are those differences owing to the different processes by which the two articles are prepared?

Ans. They are.

Int. 82. Do the same differences exist between the Exhibit K K to buckskin prepared by the ordinary process as they exist between Exhibit J J and such buckskin?

Ans. The same, with the difference that J J contains tar and will therefore preserve the leather from decay and rats or mice.

Int. 83. In all of the hides which you have unhaired by sweating since you commenced in 1872 have you ever lost a single hide by rotting?

Ans. I do not remember that I ever lost one single hide.

Int. 84. When the hides are unhaired by sweating and dried, and nothing else done to them, will they absorb water—be softened by water—or not?

Ans. Always will be softened by water. Sweating will not diminish the solubility; on the contrary, increases it if anything.

Int. 85. Have you seen the different rawhides prepared by the Eastern manufacturers and sent here and sold in competition with yours?

Ans. I have, occasionally. I haven't seen of late any.

Int. 86. Have any of those that have ever come here or any you have ever seen in the East, manufactured by the processes you claim to be infringements or by other means, been superior to your article in any respect?

Ans. I haven't the least idea they ever were.

Int. 87. Which are the stronger of the two, yours or those made in the East unhaired by the liming process?

Ans. I always had a firm conviction that those manufactured by my process are decidedly stronger. On general principles, all sweated leather is stronger than limed leather. Though the difference may not be very striking, it could be detected by constant use and comparison. I mean limed leather, from which the lime has been removed.

H. ROYER.

220 *Evidence for Complainant in Reply,*

Taken pursuant to the sixty-seventh rule of the Supreme Court of the United States, in equity, as amended, before me, Isaac H. Southwick, Jr., special examiner.

PROVIDENCE, R. I., *Feb.* 14, 1888.

Present: M. A. Wheaton, Esq., of counsel for complainant; Wilmarth H. Thurston, Esq., of counsel for defendants.

Deposition of William Coupe.

Direct examination by M. A. WHEATON, Esq., of counsel for complainant:

Int. 1. You are one of the defendants in this case, are you not, and have already testified in it?

Ans. I am one of the defendants in this case and have already testified in it.

Int. 2. Please look at this little pamphlet shown you and state

whether it is a business circular issued by the defendants in this case.

Ans. It is.

(Complainant puts in pages 5, 6, 7, 8, and 9 of the pamphlet and the same is marked "Complainant's Exhibit W, I. H. S., Jr., sp'l ex'r.")

Int. 3. Is the statement true on page 5 of this pamphlet that the defendants manufacture an article of rawhide lace-leather that is manufactured by a process that was invented by you?

Ans. It is absolutely true.

Int. 4. On page 63 of the printed evidence you stated, in answer to Int. 29, that it was nothing new to convert hide into leather by mechanical action and fulling grease into it in 1863. Did you invent the process mentioned in Exhibit W before 1863 or after that date?

Ans. There was nothing new about the principle of con-
221 verting hides into leather by mechanical action and fulling grease into them at that time. It was a well-known method, and had been used for a great many years. It was one of the three underlying principles of converting hides into leather.

(Mr. WHEATON, interrupting:

None of that contains the slightest particle of an answer to my question. The question is whether you invented the process mentioned before 1863 or afterwards. Will you be good enough to answer the question?

Mr. COUPE, continuing:)

I would state broadly to avoid further controversy that my patent No. 182,106, that has already been put in as evidence, will show its date and claim.

Int. 5. Your patent is dated Sept. 12, 1876, and the application for it was filed July 11, 1876. How long prior to your filing that application did you invent the process, as nearly as you can state?

Ans. It is not exactly fresh to my mind at this moment, but I think it appears in previous testimony. I can't remember at this time definitely.

Int. 6. In the process which you were using in the beginning of 1884 and for some years prior thereto did you treat your rawhide for lacing in an air-tight drum and with warm air, as mentioned in your said patent?

Ans. I use substantially the same method to-day for the manufacture of rawhide leather that I used prior to the taking out of that patent, with the exception of the substitution of one style of fulling mill for that of another and the further substitution of tar in the stuffing compound for paraffine. It is the same fulled rawhide leather to-day as it was then. The same principles for its production are employed with the exception of those just noted.

Int. 7. Do you use the current of warm air in the treatment of your hides mentioned in your patent?

Ans. We do not, but we get the same effect from the heat which

is generated by friction on the hides in the crib by the fulling operation.

Int. 8. What is that effect, if you know?

222 Ans. It is a well-known fact by all practical men—men that understand the business of converting hides into leather by a fulling operation—that a certain amount of heat must be generated in order to produce the product.

Int. 9. Do you use the "sour" mentioned in your patent, composed of sulphuric acid, water, etc.?

Ans. We do when necessity requires it. That is not absolutely necessary. Under some circumstances it is required and under other circumstances it is not, but it makes the patent complete to be used under all circumstances.

Int. 10. Have you treated one hide in twenty which you have manufactured into rawhide leather since 1876 with the sour which you have mentioned?

Ans. Not one hide in twenty, but thousands.

Int. 11. Will not the sulphuric acid in the sour unite with the lime that is necessarily left in the hide and form a sulphate of lime in the hide when the sour is used by you?

Ans. We don't have any lime in our hide. The lime has all been worked out and the hide freed from all its impurities previous to coming to the sour. It might under some conditions and circumstances, but to the very limited extent to which we use it the term "sour" itself implies what we mean.

Int. 12. For how many days do you ordinarily leave the hide in the lime?

Ans. I suppose that is a secret of my business that you have got nothing to do with. I leave them in long or short enough to answer the purposes of my process.

(Mr. Wheaton insists upon an answer.

Counsel for defendants calls attention to the fact that the witness has once before attended voluntarily at the request of the complainant and given his testimony in the opening of this case, at which time he made a full statement of the process employed by him and was examined at length in regard thereto by counsel for complainant; that he was subsequently examined as a witness on behalf of the defendants in this case and was cross-examined by counsel for complainant as fully as was desired; that he has now again

223 attended voluntarily at the request of counsel for complainant on short notice and at considerable inconvenience to himself, and the question is therefore objected to—

First, on the ground that if the matter is proper to be inquired into at all it should have been done at an earlier stage of the case.

Counsel for defendants further calls attention to the fact that it appears in the testimony of Mr. Royer that he has tried to use the liming process and failed; and the question is therefore objected to.

Secondly, on the ground that the witness cannot be called upon to furnish information to Mr. Royer upon this subject.

Counsel for defendants objects to the question, thirdly, for the

reason, stated by the witness in his answer, that it relates to a secret in his business which he is not bound to divulge, and the witness is instructed that he need not answer the question if it relates to a secret of his business.)

Int. 13. Are there not more than twenty men who have been in your employ assisting in the business of liming and unhairing your hides since 1876 who are now living and out of your employ and control?

Ans. It is a question in my mind if there are two men at this present time living, out of my employ, that can lime a hide properly to be made into a perfect product of pure rawhide leather. It is a very nice thing to do.

Int. 14. Will you please answer the question last asked?

Ans. If the answer that I have given does not answer the question, I answer, "No, sir."

Int. 15. Have you not discharged a great many men since 1876 who had more or less to do with the liming of your hides while they were in your employ?

Ans. Yes.

Int. 16. Is that number more or less than twenty?

Ans. In order to give an intelligent answer to that question, so that it would appear correctly, it would be necessary for me to know what particular class of men are meant. There are two different classes of men employed about liming. One is the men who do the ordinary rough work of putting them in and taking them
224 out; the other is the men who have charge of the work, to see when they are put in and when they come out. The first class come and go as they think proper, but as a rule they know nothing about the merits of liming further than it will take off the hair. The other class of men, of course, are more thoroughly acquainted and know more about the real object of liming required outside of taking off the hair. I have discharged some of the last class for negligence and inattention to their business. It was not necessary to discharge the men of the first class; they came and went as they pleased. I may have discharged three or four of the foremen or men of the second class. As I have said before, the liming is a very difficult matter—to do it successfully for mechanical rawhide—and it almost requires my personal attention to keep it running right.

Int. 17. Do you put the hides back into the lime after they have been unhaired? So far your evidence shows that you have not done so. Is that evidence correct or not?

Ans. I emphatically object to saying anything upon that particular point of liming which will instruct my competitors in something in which they are in no way posted and which I consider is a very vital point in the manufacture of a pure article of rawhide leather.

Int. 18. Please indicate whom you mean by "competitors" in the last answer.

Ans. I mean everybody who claims to be manufacturing mechanical rawhide, Mr. Royer included.

Int. 19. When you filed your sworn application for your patent, in 1876, did you in that record make any misstatements or statements which were not strictly true in describing your process of liming and unhairing the hides?

Ans. It is not fresh to my mind at this time just what statement I did make. If I can have the statement read I will give an expression.

Int. 20. Have you now any recollection of having stated anything in that application, which was verified by your oath, as to your process of liming and unhairing which was not strictly true at that time?

225 Ans. I have just stated that it is not just fresh to my mind at this time. Why do you not read the statement and let me make an expression?

Int. 21. In your former testimony you described certain rawhide leather which you testified was made at the factory of Davis & Co., at Pawtucket, and used for army leather about 1863. How were those hides unhaired?

Ans. By the liming method.

Int. 22. What was the next step in the treatment of those hides after unhairing?

Ans. The hides were tempered.

Int. 23. How were they tempered? Please explain fully.

Ans. Hardened to a greater or less extent.

Int. 24. Please describe the process by which that tempering was accomplished.

Ans. There was no particular process about it. The hides were simply hung up to dry, so as to get rid of a certain quantity of the water. It was necessary that a good part of the water should be expelled; if not, it would take too long to bring them up to a suitable condition for the fulling operation. The hide must be brought necessarily to a certain consistency as to moisture before the successful operation of fulling can begin, as no heat can be generated where there is an excess of water, or at least not sufficient to successfully operate the process. I would say, in further reference to that point, there is a difference of opinion amongst manufacturers as regards the particular moist condition in which the hides shall be put to most successfully manipulate them.

Int. 25. Is there any necessity in having a hide hot or warm to make it absorb the grease?

Ans. Yes, sir; in connection with the method we are now discussing.

Int. 26. If a dry, hard, unhaired piece of rawhide is placed in any of the oils—fish oil, etc.—which have been used for stuffing them, how long would it take that piece of rawhide to become saturated with the oil, no mechanical action of any kind being used and the oil being at an ordinary temperature, say seventy degrees or thereabouts?

226 Ans. Well, that is a poser. I have taken such hides as are spoken of there; I have put on all the oils that are known in the art of currying; I have put on tar, put on paraffine, and I

have left them there for various lengths of time (perhaps for over two years), and never knew them to penetrate beneath the surface. If you want to get any kind of grease, animal fat, vegetable oils, or grease of any name or nature into a rawhide you must bring it to a consistent state of moisture, then apply your grease to it, subject it to mechanical action, raise your temperature to a greater or less degree, and your substance will penetrate, or your oil or whatever it may be. As the heat is generated the water is expelled, the grease enters, the chemical change takes place, and the rawhide is converted into leather. Now, I have done this with all classes of grease; I have done it with tallow alone, fish oil alone, tar alone, and a combination of all the various ingredients that are used for stuffing leather. I hold in my hand at this time a piece of leather that has been softened mechanically with nothing but tar.

Int. 27. Will dry, hard, unhaired rawhide absorb water when placed in it at ordinary temperatures, say seventy degrees or higher?

Ans. Why, of course it will. If you left it there long enough it would rot.

Int. 28. How long has it been a well-known method of manufacturers of factory leather of working oil, grease, etc., into hides by first soaking the hide with water, then letting the surplus water drip off of the hide, then putting such wet hide into a fulling mill, with oil or other stuffing on it, then operating the fulling mill, by which means the water would be evaporated from the hide and the stuffing enter the hide as the water left it, and so take the place of the water in the hide?

Ans. That, as I stated before, is an ancient and well-known method of converting hides into leather. It was one of the three underlying principles of making leather that was carried by the ancients (I think about the twelfth century) from Africa into Europe, and has been used to a greater or less extent from that day to the present. It was used before the present improved style of fulling machine was brought into existence, but it was done
227 by some kind of mechanical action. There has been no improvement made from that day to this in the principle, but there have been many improvements made in machines for doing it. The principle is the same to-day as it was then—just the same as the principle of uniting tannic acid or tannin with gelatine and fibre.

Int. 29. Was the method mentioned in my last question the method which was used by Davis & Co. in the manufacture of the army leather made by them about 1863, mentioned in your former evidence and in Mr. McKelvey's?

Ans. That method was the same method used at Davis's and the same that I have described before in the testimony. Those hides were limed, drenched, tempered, or partially dried, fulled with grease until they were soft, after which they were ready for the subsequent methods of treatment.

Int. 30. Does not a hard, dry rawhide become soft when it absorbs and becomes saturated with water?

Ans. It depends altogether — what kind of a hide it is. Some hides you might leave in the water until they rotted before they would become soft, as that term is used in connection with tanning. Many hard, dry, flint hides require to be milled to get them soft, in the strict sense of the word, while others, such as our green or green-salted domestic hides, would soften without the assistance of any milling.

Int. 31. Is there any pure rawhide that is unhaired and dry and hard that will not be soft when it absorbs and is saturated with water at ordinary temperatures above freezing—say seventy degrees or thereabouts?

Ans. I would ask what is meant by pure rawhide.

Int. 32. I mean the ordinary animal hides which have been unhaired either by sweating or ordinary liming and which have not been treated with any tannin or chemicals whatever—such as have been ordinarily used for the manufacture of factory leather—taken when they are unhaired and then dried hard.

Ans. Hides which have been prepared in the way spoken of would, to a certain degree, become soft after being subjected to a soak for a greater or less length of time; but it is a question in my mind if you could get the hide soft in any reasonable time
228 and in a suitable manner so as to successfully mill unless the hide has been purged of all its impurities. It is a well-known fact by most practical men that there is a certain amount of scud and albumen that remains at the root of the hair, and unless the hide is thoroughly purged of all its impurities before it is subjected to the method of drying, that it will be a difficult matter to soak it, or, in other words, to temper it in a suitable manner, so that it can be successfully fulled in the fulling mill, for the reason that the fatty matter, the albumen, and the scud unite during the process of drying and form a sort of cement, which becomes impervious to water. That is the reason that Mr. Royer was four or five years before he could make rawhide, notwithstanding he had what he called his improved fulling machine and the use of tar, that he lays such a great stress on. He was four years, according to his own testimony (at any rate, from 1867 to 1872), before he could make his rawhide pay for itself. Now he says we are copying after him; and I should never want to follow such a pattern.

Int. 33. What do you mean by scud?

Ans. I mean the dirt and filth that all animal hides naturally attract, similar to wool. Wool has to be scoured to free it from all its impurities before you can make a fine product.

Int. 34. Is scud a part of the hide itself, or is it foreign matter that becomes attached to the hide, as you use the term?

Ans. It is foreign matter. In the strict sense of the term as I use it, "hide" is pure fibre and gelatine.

Int. 35. When you have used the term "impurities" in speaking of purging a hide of its impurities, has the word "impurities" referred to foreign matter which was not a part of the hide itself?

Ans. When I use the term "pure rawhide" I mean hide that has been purged of everything but fibre and gelatine. Albumen is

a part of the hide; so is the fatty matter which the hide contains a part of the hide; but neither of those substances are susceptible of being converted into leather, consequently it is necessary that they should be removed in order to make a good product.

Int. 36. Why is not the natural grease of the hide just as valuable in the finished rawhide leather as is the foreign grease and oil which is stuffed into it?

229 Ans. For the reason that if the albumen and the grease that all hides naturally contain is left in the hide after undergoing the chemical operation of liming — forms a different substance altogether from the oil and grease which is afterwards fulled into the leather.

Int. 37. When did you first commence treating the hides in the hard condition in which they are left when they are one-tenth moist?

Ans. I don't remember now.

Int. 38. Please fix the time as near as you can.

Ans. I have been in a very nervous state to-day and my memory is not so good that I can definitely fix the time.

Int. 39. Who beside yourself did you know to mill hides in the dry and horny condition in which they are left when only one-tenth moist prior to 1873?

Ans. I don't know any one absolutely.

Int. 40. What degree of moisture did you have in the tawed hides which you manufactured or milled and fulled when you commenced business for yourself, in 1865?

Ans. About the same as we have now.

Int. 41. Did you work your tawed hides in 1865 in the fulling mill in the hard and horny condition in which they are left when only one-tenth moist and in which you now work them in your boarding and breaking machine?

Ans. We worked them on the pin block in the same horny condition (nine-tenths dry) as we work them now in our boarding and breaking machine.

Int. 42. How much time was required to treat a hide in your pin blocks as you treated them prior to 1867 and before you constructed your power pin block?

Ans. That altogether depended upon the degree to which the tanning had been carried. The more the leather was tanned the less fulling it needed; the less it was tanned the more fulling it required. It was a laborious method, consequently we had to tan considerably to save as much fulling as possible.

Int. 43. What was the average time, as near as you can now tell?

230 Ans. Well, it would be impossible for me to say, it was so long ago.

Int. 44. Would it be more or less than an hour?

Ans. In some cases it might be less; in some cases it might be more; I can't say definitely at present.

Int. 45. How did you keep the hides hot which you fulled in a hand pin block at any time?

Ans. It was the custom at that time to double the hide over in the middle or pretty near the middle, throwing the neck over to on the butt and then rolling the hide up in such a manner as to make it cylindrical in shape; then tie a string around it to keep it in that position and whack it on the pin block, keep turning it in the hand as you continued the process of pinning or blocking, whichever you call it. The friction from the blows and the greater or less penetration of the pins into the leather generated the heat, which expelled the water, at the same time allowing the grease to penetrate and the chemical change to take place, which is necessary to convert that portion of the hide which was left raw into leather.

Int. 46. Would there be as much weight of water expelled from those hides as there was grease or other stuffing fulled into them?

Ans. No, sir; the weight of grease that was fulled into the hide very much exceeded the weight of water that was taken out.

Int. 47. In your former testimony you mentioned buckskin, glove leather, chamois, as being rawhide. What kinds of glove leather did you refer to that you considered to be fulled rawhide?

Ans. Ordinary glove leather; similar to the glove that I have in my hand.

Int. 48. Is not that glove made of ordinary buckskin?

Ans. I should say that this glove is made of Calcutta hide. I simply make that as a supposition, for the reason that the fibre seems to be of a closer nature than the fibre of a buckskin.

Int. 49. Does not that glove appear to be alum-tanned or tawed leather?

Ans. No, sir.

Int. 50. Do you find any gelatine in the hide of which that glove is made?

231 Ans. There might be a very small percentage in there.

Int. 51. Is that glove greasy or does it contain any stuffing like your fulled rawhide?

Ans. Whatever stuffing it does contain has united with the fibre and gelatine of the hide and formed that insoluble substance called leather. The excess of grease has been expelled by the subsequent operation that the lace-leather does not go through, consequently the glove does not show the excess of grease that the lace-leather does.

Int. 52. Suppose you were to extract the grease from your fulled rawhide with naphtha or otherwise, would the gelatine be left in the hide or not?

Ans. About the same proportion would be left as is left in the glove if it was made from the same class of hide.

Int. 53. Do you mean to testify that ordinary buckskin is fulled rawhide when manufactured according to the ordinary well-known methods of manufacturing buckskin?

Ans. There are various methods of manufacturing buckskin for glove leather. One is made by the entire fulling method. Some are made by what may be called the chemical process. That which is manufactured by the fulling process is fulled rawhide.

Int. 54. I have reference to the ordinary buckskin, which is

well known in the market for a great many years and which has been manufactured by the ordinary, usual, and well-known methods of manufacturing buckskin, a portion of which method consists of putting the wet hide in a fulling mill and there, in that fulling mill, expelling the water and working any kind of stuffing into it. Do you mean to testify that such class of buckskins is fulled rawhide?

Ans. If the hide was raw when it went into the fulling mill and fulled until it was sufficiently soft, so that it would not become hard, it would be fulled rawhide in the ordinary sense.

Int. 55. My question refers to the ordinary buckskins as they actually were made, which have been well known as buckskins on the market and to the trade for a great many years. You know perfectly well to what the question refers. Are such buckskins fulled rawhide, as you use the term? Please answer the question without telling what something else would be, but which in fact never was made.

232 Ans. I have answered the question.

Int. 56. Do you call the leather of which ordinary kid gloves are made fulled rawhide or not?

Ans. No, sir.

Int. 57. What kind of bag leather did you refer to as being made of fulled rawhide?

Ans. Such as ladies' bags are made of.

Int. 58. In the case of the army leather made at Davis's, what were the subsequent processes that the hides were put through after fulling?

Ans. They were again fulled, being impregnated, while the fulling operation was going on, with an alkali to work out the excess of grease.

Int. 59. When a rawhide is put into a fulling mill thoroughly saturated with water is it not just as soft as it is afterward when it comes out of the machine with the water expelled from the hide and its place taken in the hide by oil?

Ans. As far as the matter of softness is concerned, it is softer going into the mill thoroughly saturated with water than it is after it comes out of the mill with the grease in it, but it is not so dry when it goes in as it is when it comes out, the heat generated by the fulling operation having expelled the water and at the same time allowed the grease to go in and unite with the fibre and gelatine.

Int. 60. Then is it not a mistake to say in such cases that the mechanical action of the fulling mill in expelling the water from the hide and working the grease into the hide softens the hide?

Ans. It would be, considering it as regards a "water soft." There is a difference between a "water soft" and a "fulled soft." Hides that are softened by water, if left to dry out, will become hard again; hides that are softened by fulling, and at the same time that the fulling is going on have the water expelled and the grease impregnated into them, will not become hard, but retain for an indefinite time their softness. The mere matter of hides containing a larger or smaller quantity of water at the time of going to the fulling

mill is simply a question of time as regards the quantity of water that needs to be expelled by the action of the fulling mill and generation of the heat before the true operation of fulling and
233 working in the grease commences. If the hides are put into the fulling mill wringing wet it takes them longer to get to the real true merits of a fulling operation than it does when they are properly tempered.

WM. COUPE.

Attest: ISAAC H. SOUTHWICK, JR.,
Special Examiner.

COMPLAINANT'S EXHIBIT W. I. H. S., Jr., Sp'l Ex'r.

Coupe's Patent Excelsior Rawhide Lace-Leather.

This is the only genuine article of rawhide lace-leather made in the United States. It contains no chemicals or tanning of any name or nature; it is a pure rawhide, freed from all its impurities and softened by a mechanical process invented and patented by our Mr. Coupe. There can be nothing better made out of hide. It has now been in use for several years, and continues to give universal satisfaction. It is the strongest and most durable lace-leather known. Samples will be sent free to any party requesting them.

Parties purchasing rawhide lace-leather are cautioned to be on the lookout for imitations, as there are a number upon the market, and they are very similar in appearance to the genuine, but are made by a chemical process which has a tendency to destroy the nature of the hide and after a short time make it worthless on account of its becoming tender. Most of it is not as good as the ordinary tanned leather that can be bought for twenty per cent. less. It is all sold upon the merits of the genuine article.

Price, 30 cents per square foot, subject to discount.

Coupe's Patent Excelsior Rawhide Picker Leather.

Our rawhide picker leather is made by the same process as our rawhide lace, only out of the finest and heaviest imported green stock. It is very strong and pliable, also very durable. It is
234 the most economical leather in use for all kinds of strapping owing to its great strength and durability.

Price-List.

Untrimmed, light	35	cents.
" medium	40	"
" heavy	45	"
" extra heavy	50	"
Trimmed	60	"

Excelsior Green-Hide Picker Leather.

Our green-hide picker leather is made from closely selected domestic steer hide with all the heads and bellies trimmed off. It is made

by a process invented by our Mr. Coupe, which enables him to take a hide in the green state and preserve it so that it will always retain its natural strength and pliability. It is the best adapted to dry places of anything that has yet been introduced for the reason that it is not affected by any high degree of temperature that a human being could work in.

Price, 55 cents per lb.; subject to discount.

Testimonials.

Office of Henry C. Hunt & Co., oak-tanned leather belting, 45 Arch St.

BOSTON, *Nov.* 22, 1878.

Messrs. Wm. Coupe & Co.

DEAR SIRS: Believing the rawhide lace-leather the best article for sewing belting of all kinds that has yet been presented to us, we have recommended its use to all our customers for the last ten (10) months, and in no instance have we ever heard a word of complaint against it, and we believe it has given satisfaction wherever tried.

Yours truly, HENRY C. HUNT & CO.

235 Office of Wamsutta Mills.

NEW BEDFORD, MASS., *Sept.* 13, 1878.

Wm. Coupe & Co., So. Attleboro, Mass.

GENTLEMEN: Yours of the 12th at hand and contents noted. We have used your new tannages of rawhide lace and picker leather for several months and think them superior to anything previously used.

Yours truly, EDWARD KILBURN, *Ag't.*

Office of Wm. H. Stoyle, manufacturers' supplies, 230 Arch St.

PHILADELPHIA, *Oct.* 23, 1878.

Messrs. Wm. Coupe & Co.

GENTLEMEN: I have been using your rawhide lace-leather for past nine months, and give it the preference over any other make in the market. The lace, in particular, is giving our customers entire satisfaction, especially in iron works and saw-mills, where great strength as well as durability is required.

I find it fast superseding tanned lace, and take pleasure in recommending it wherever lacing is used.

Respectfully, W. H. STOYLE,

Man'f'r "Keystone" Brand Cut Lacing.

Office of J. B. Hoyt & Co.

NEW YORK, *Oct.* 21, 1878.

Messrs. Wm. Coupe & Co.

GENTLEMEN: In reply to your inquiry as to how we are pleased with the rawhide lace-leather, would say that we consider it the

strongest and best leather we have ever handled and the nearest approach to a perfect lacing we have yet seen.

Yours respectfully, J. B. HOYT & CO.

236 Office of Joseph Sharp.

CINCINNATI, *Dec.* 23, 1878.

Messrs. Wm. Coupe & Co.

DEAR SIRS: As you perceive, my trade in rawhide lace continues to increase. Parties using it speak in highest terms of its strength and lasting qualities. I have never had a complaint.

Respectfully, JOSEPH SHARP.

Office of Bickford & Curtiss, 53 & 55 Exchange St.

BUFFALO, N. Y., *Dec.* 21, 1878.

Wm. Coupe & Co.

GENTLEMEN: Your rawhide lace-leather is giving much better satisfaction to our customers than anything of the kind we have ever had. We are very much pleased with it.

Yours respectfully, BICKFORD & CURTISS.

Deposition of C. Tennant Lee.

Direct examination by M. A. WHEATON, Esq., of counsel for complainant:

Int. 1. What is your name, age, residence, and occupation?

Ans. C. Tennant Lee; forty; Boston, Mass.; chemist.

Int. 2. What has been your training and experience as a chemist, and have your studies embraced the composition of animal hides and the chemistry of treating and curing them?

Ans. A course at the Institute of Technology, Boston, and in scientific schools in France and Germany—Ecole des Sciences Appliques Mulhouse and Royal Chemical Laboratory, University of Berlin. Concerned largely in questions of applied chemistry and analytical work, and am regularly engaged in the study of and work relating to tanning. My training and experience has embraced questions relating to the composition of animal hides and the chemistry of treating and curing them.

237 Int. 3. What is the composition of animal hides?

Ans. It consists of fibrous and gelatinous matter, the fibrous matter being in bundles parallel to the surface of the hide and interlocking each other. These constitute the corium or true leather skin, and are surrounded by a fluid called coriïn. This fluid is soluble in water, and may be removed by soaking, which leaves the true leather skin soft and saturated by water.

Int. 4. What is the first portion of the skin that would be affected by water used as a solvent?

Ans. The coriïn before mentioned, which is removed by soaking.

Int. 5. What is the substance that holds the hair to the hide?

Ans. It is albuminoid in nature, commonly referred to by tanners

as albumen. It is broken up with considerable ease in any one of the processes which may be used to remove the hair, which, decomposing the albuminoid, destroys its tenacity.

Int. 6. Is there any good purpose served in treating rawhides and in making what is now known as fulled rawhide by first removing the natural grease of the hide, or any part of it, and afterward replacing it by fulling other grease into the hide in a later part of the process?

Ans. It is my opinion that the removal of the hair from the hide can be most economically accomplished by such sweating process as shall be thoroughly effectual. As noted, the albuminoid body which holds the hairs is not difficult of decomposition, and as the fatty portions attached naturally to the hide would not be so readily decomposed as it, it would be possible to successfully remove the hair without destroying the natural fat. Such sweating processes, cold or hot, are in use in ordinary tanning operations, and may undoubtedly be advantageously used in the preparation of fulled rawhides.

Int. 7. Did you hear Mr. Coupe's description of the difficulty of properly liming hides given in his evidence to-day?

Ans. I did.

Int. 8. Is the difficulty of properly sweating a hide for unhairing as great as were the difficulties of properly liming, as stated by Mr. Coupe?

238 Ans. I think the difficulties are quite as great in the sweating, but the results are more satisfactory, because there is no lime either in combination with the fat or uncombined, which has to be removed afterwards. If any lime is left in the fibres of the hide it unquestionably tends to both weaken and harden the product; and herein, probably, lies the inconvenience and difficulty of proper liming.

Int. 9. Is there any portion of the animal hide after the hair is removed which is not nutritious as an article of food both for people and carnivorous animals?

Ans. So far as my experience goes, the gelatine, which is the chief constituent of rawhide, will serve as an article of food.

Int. 10. Are not calves' heads very commonly used as an article of food when they are prepared and cooked with the skin of the head on?

Ans. Yes.

Int. 11. In such dishes is not the skin as good as any part of the dish, if not the best?

Ans. Yes; being largely gelatine and very palatable.

Int. 12. Is it not an every-day thing to eat, as articles of first-class diet, chickens with the skins on, turkeys with the skins on, fish with the skins on, and also pork and ham?

Ans. Yes.

Int. 13. In such cases has not the whole or a portion of the grease been extracted from the skins by the cooking operations that they have gone through?

Ans. Yes.

Int. 14. Do you know of any reason in the world why rats would refuse to eat an unhaired rawhide which contained all its original elements except the natural grease in it?

Ans. No.

Int. 15. Is there any glue in animal rawhide in its natural state?

Ans. No; glue is formed by prolonged boiling in water of rawhide, but as such does not exist in rawhide. Note "Galloway's Qualitative Analysis," page 278, par. 845.

Int. 16. Are there any substances in a rawhide which has
239 been unhaired by sweating that will form by themselves in the hide any kind of cement, or anything in the nature of cement, that is insoluble in water at ordinary temperatures?

Ans. Provided that the albuminoid bodies which have been decomposed by the sweating process have once been thoroughly removed by washing, there is nothing of the nature named left.

Int. 17. What is the difference between the article now known as fulled rawhide and a skin that has been tawed with oil only?

Ans. The difference is one of combination in the case of the chamois skin, with its gelatine and fat. This combination is chemical. After the union has been thoroughly effected between oil and skin by mechanical means, oxidation, induced by heat and time, effects their chemical union. In fulled rawhide, the gelatine fibres having been surrounded by grease, rosin, and tar in mixture, the thorough mechanical combination is effected by the milling. But the chemical combination is prevented, first, because the mixture noted is with difficulty oxidizable, and, secondly, because the fibres of the rawhide are not in that state of minute subdivision which would favor a chemical combination, were such combination possible.

Int. 18. Please state whether or not any chemical change takes place in the hides when they are treated by Mr. Coupe's process, as described in his former testimony, and in Mr. Royer's process, as described in his testimony, under which processes the article now known as fulled rawhide is manufactured by each of them respectively.

Ans. The action appears to be mechanical only and not chemical, or, at least, in an exceedingly limited way, if any.

Int. 19. Will paraffine enter a hide as a stuffing?

Ans. Except under heat it will not.

Int. 20. What degree of heat is necessary to make it enter as a stuffing?

Ans. The melting point of the paraffine used.

Int. 21. Will lime, used in unhairing, have the effect of plumping the hides?

Ans. No.

(Adjourned.)

240 FEB. 15, 1888.

Cross-examination by WILMARTH H. THURSTON, Esq., of counsel for defendants:

Cross-int. 22. Have you ever had any practical experience in the manufacture of leather?

Ans. No; my testimony was from the professional position of a chemist.

Cross-int. 23. And you have had no practical experience, have you, in removing the hair from animal hides, either by the sweating method or by any other method?

Ans. Yes; between two and three years ago I carried out a considerable line of practical experiments in this direction.

Cross-int. 24. Such experience, then, was of an experimental character and not in connection with the preparation of leather for the market?

Ans. It was for the purpose of determining the relative values of various methods in practical use.

Cross-int. 25. What were the various methods which you experimented with?

Ans. The usual ones in use and other chemical ones.

Cross-int. 26. Do you know whether in practice any requirements exist in the removal of the hair and the preparation of the hide for the subsequent processes, when the hide is to be manufactured into rawhide leather, different from what exists when the hide is to be converted into tanned leather?

Ans. I think that question must be answered by a practical manufacturer. I am testifying to matters of chemical fact. My position is not that of a practical manufacturer, and my testimony will be consistently given from the standpoint of the chemist.

Cross-int. 27. What were the special sources of information upon which your testimony in this case was based?

Ans. To special work and investigation carried on during preceding years upon the subject of rawhide in its relation to leather-forming capabilities and analogous. The same is covered by
241 the general instruction of the chemist upon these subjects as laid down in general works of technical chemistry.

Cross-int. 28. Did you examine or consult any special works, devoted particularly to the art of manufacturing leather, as distinguished from general works on chemistry?

Ans. Not so far as my general testimony was concerned, except in the answer to Int. 3, which was on the authority, so far as the definition was concerned, of "Davis on Leather."

Cross-int. 29. Do I understand that the book you have referred to in your last answer, to wit, "Davis on Leather," is the only work on the special subject which you consulted?

Ans. Yes.

Cross-int. 30. Did you ever examine or consult a work entitled "Arts of Tanning and Currying," by Morfit?

Ans. I have seen the work.

Cross-int. 31. Have you ever examined or consulted the article on "Leather" in the "Encyclopædia Britannica"?

Ans. No; it is not usual for chemists to use such works as books of reference, as they are for the most part compilations of other works to which they have access.

Cross-int. 32. Is that which you have called "coriïn," in your answer to Int. 3, the same thing as, or different from, what you have referred to as albuminoid matter in animal hides, as you understand it?

Ans. It is different from the albuminoid matter, being soluble in water.

Cross-int. 33. The albuminoid matter or albumen, as commonly called by tanners, is insoluble in water, is it not?

Ans. Yes.

Cross-int. 34. You state, in answer to Int. 6, that, in your opinion, the removal of the hair from the hide can be most economically accomplished by such sweating process as shall be thoroughly effectual. What sweating process, in your opinion, will be thoroughly effectual?

Ans. The one which best removes the hair without injuring the hides.

242 Cross-int. 35. And what is that one?

Ans. That is a detail of process to be settled by the manufacturer, considering the stock which he has to work on.

Cross-int. 36. And one which you are not prepared to express an opinion about?

Ans. As in my last answer, this is not a question for a chemist to specifically answer.

Cross-int. 37. The sweating method for removing the hair is one of decomposition or incipient putrefaction, is it not?

Ans. Yes.

Cross-int. 38. And it leaves the albuminoid matter and the fatty matter in the hide, does it not?

Ans. The albuminoid matter has been decomposed, and as such remains in the hide until it is removed. The fatty matter is slightly, if at all, acted upon, and remains where it was.

Cross-int. 39. Referring to Int. 9 and your answer thereto, are we to understand that that answer applies equally to all hides after the hair has been removed, no matter by what method the hair has been removed?

Ans. If the agent whereby the hair is removed has been thoroughly separated from the hide and it is in good condition, yes.

Cross-int. 40. Should you say that it made any difference whether the fatty matter remained in the hide or had been removed therefrom?

Ans. No.

Cross-int. 41. Your answer to Int. 9 appears to be based upon experience. Will you please tell us what experience you have had with rawhide as an article of food?

Ans. In my own laboratory I have seen mice eat the various products of a hide.

Cross-int. 42. Your experience, then, was not a personal one, as a consumer of rawhide as an article of food?

Ans. No.

Cross-int. 43. Has it been your experience that calves' heads are usually cooked with the hide on?

Ans. After removing the hair, always, so far as I know.

243 Cross-int. 44. By whom is the hair usually removed—the butcher, the market-man, or the consumer?

Ans. The butcher, I believe.

Cross-int. 45. Referring to Int. 14 and your answer thereto, to what condition of the hide did you understand that question to refer?

Ans. To any of the conditions in which it may be found ordinarily.

Cross-int. 46. What did you understand by the word "unhaired" in the question? Did you understand it to refer to a hide from which the hair had been removed or to one from which it had not?

Ans. To the former.

Cross-int. 47. By what process would you get a hide to that condition in which it was freed from hair, but yet contained all its original elements except the natural grease?

Ans. By the process of shaving.

Cross-int. 48. Is there any other process that you know of which would produce that result?

Ans. In its strictest sense probably not; practically one of the chemical unhairing processes would produce that result.

Cross-int. 49. Which one?

Ans. There is one of bi-calcium sulphide.

Cross-int. 50. By the process of shaving, referred to by you in your answer to cross-int. 47, you refer, I presume, to some method of shaving off the hair?

Ans. Yes.

Cross-int. 51. How, by any method of shaving off the hair, would you remove any of the natural grease from the hide?

Ans. You would not.

Cross-int. 52. Did you observe that cross-int. 47 referred particularly to getting the hide into a condition in which it was freed from hair, but yet contained all its original elements except the natural grease?

Ans. I misunderstood the interrogatory, taking it to mean a hide which was unhaired only and contained the natural grease and other original elements.

244 Cross-int. 53. Then it is true, is it not, that the process of shaving would not get the hide into the condition referred to in cross-int. 47?

Ans. It is.

Cross-int. 54. And it is further true, is it not, that there is no known process which would get the hide into the condition specified in cross-int. 47?

Ans. I think there is a known process.

Cross-int. 55. What is it?

Ans. After unhairing the hide by any appropriate means of sweating, I consider that the hide substantially contains all its elements as before and the grease may be removed by an appropriate solvent.

Cross-int. 56. Without removing or disturbing any of the other original elements?

Ans. Undoubtedly.

Cross-int. 57. How would it be if the hair had been removed by the liming method?

Ans. The liming method would also wholly or in part effect the removal of the grease?

Cross-int. 58. And leave all the rest of the original elements unchanged and undisturbed, do you think?

Ans. There would be more or less decomposition of the softer tissues by the liming.

Cross-int. 59. You say there is no glue in animal rawhide. You do not mean, I presume, that there are no gelatinous substances?

Ans. I mean that glue as such does not exist in rawhide.

Cross-int. 60. By your answer to Int. 16 I understand you to mean that if all those things which go to form a cement have been thoroughly removed, then, of course, no cement will be formed. Am I correct?

Ans. Yes.

Cross-int. 61. You speak in that answer of removing the albuminvid bodies by washing. Do you think that this can be done, in view of the fact that you have already testified that such albuminoid bodies are insoluble in water?

245 Ans. They become soluble by the decomposition of the sweating process.

Cross-int. 62. Do I understand that you are familiar with the processes of manufacturing rawhide leather employed respectively by Mr. Royer and Mr. Coupe?

Ans. I am familiar with them so far as they appear in the printed testimony and the patent of Mr. Coupe.

Cross-int. 63. You have never seen either of them practised, I take it?

Ans. No.

Cross-int. 64. So far as you are able to judge from the printed testimony in this case, do you understand that any chemical change or action takes place in the manufacture of the leather either by the process of Mr. Royer or the process of Mr. Coupe?

Ans. No.

Cross-int. 65. You do not think, then, that in the process employed by Mr. Coupe, for instance, any chemical change results even from the use of the liming method described by him for removing the hair and preparing the hide for future operations?

Ans. Not so far as the pure rawhide is concerned.

Cross-int. 66. Do you think that the lime has no chemical effect in the process referred to?

Ans. It has effect so far as what is removed from the hide is con-

cerned, but not so far as what is left, provided the lime is effectually removed.

Cross-int. 67. If the lime has no effect upon what is left, as you express it, what is the use of so carefully removing the lime?

Ans. Because it would tender the hide.

Cross-int. 68. In your answer to Int. 17 you have, as I understand it, attempted to draw some distinction between what takes place when rawhide is manufactured by Mr. Royer or Mr. Coupe by stuffing it with grease in a fulling machine and mechanically forcing the grease into the hide and what takes place when the same thing is done in the manufacture of chamois skin, to which you particularly refer. What is the distinction that you intended to make?

Ans. The distinction between chemical union in the case
246 of the chamois skin and mechanical or physical union in the case of the fulled rawhide.

Cross-int. 69. What is your authority for that distinction?

Ans. Knowledge of the facts. You can take a chamois skin and seek to return it by treatment to its original condition as before the tawing process, but the fatty matter with which the skin is combined resists such separation. The fatty body which is in fulled rawhide may be for the most part removed by solvent treatment.

Cross-int. 70. Upon what do you base the last statement in your answer? Have you ever tried it?

Ans. Upon lace-leather, which I have tried.

Cross-int. 71. Have you ever tried it upon Mr. Coupe's leather?

Ans. Not identified as such. My remarks are upon the general differences in the two classes of leather.

Cross-int. 72. And you think, do you, that in the processes employed by Mr. Royer and Mr. Coupe respectively no chemical action takes place between the ingredients of the stuffing and the fibres of the hide?

Ans. That is my opinion.

Cross-int. 73. Now, have you not practically twice admitted in your testimony that some chemical action does or may take place—first in your answer to Int. 18, in which you say that such change would be only in a limited way, and again in your answer to cross-int. 69, in which you imply that the fatty matter cannot be wholly removed from fulled rawhide—by your statement that it can for the most part be removed?

Ans. I have only made in my answers such qualifications as any chemist would do. We speak not of absolute reactions or conditions, but of such conditions which so dominate and preponderate and characterize the existing state. Some slight deviation is only that commonly found in all manufactures.

Cross-int. 74. You understand, do you not, that in the manufacture of both chamois leather and that which Mr. Royer has been pleased to term fulled rawhide the hide is taken entirely raw and stuffed with grease by mechanical action?

Ans. I understand that to be the first step in the tawing of chamois and the principal one in the preparation of fulled rawhide.

247 Cross-int. 75. And so far as the effect of that grease upon that hide by the action of the fulling operation is concerned, it is precisely the same, is it not, in both cases?

Ans. No.

Cross-int. 76. Why not?

Ans. Because subsequent treatment of the chamois and difference in its condition of fibres produce a different effect.

Cross-int. 77. My question made no reference to subsequent operations, but merely to fulling the grease into the hide by mechanical action. Do you mean to say that the effect of this operation is not precisely the same in one case as in the other?

Ans. I mean to say it isn't.

Cross-int. 78. Again I ask you why not?

Ans. We must consider both primary and secondary effects. The primary effect approximates the same in both cases, except that it is more thorough in the case of the chamois. The secondary effect of the fulling constitutes the main point of difference between them, in that there is no further effect in the case of the fulled rawhide. The secondary effect in the case of the chamois is chemical in its action. There is no chemical action, as before stated, in fulled rawhide between the grease and the rawhide.

Cross-int. 79. What do you mean by the term "secondary effect" in your last answer?

Ans. A second condition, due to a rearrangement of the component parts.

Cross-int. 80. I understand from your answer to cross-int. 78 that you agree with me that the first or primary effect of fulling the grease into a piece of rawhide that is to be made into what is called chamois leather is the same as the effect of fulling grease into rawhide that is to be made into what you have termed fulled rawhide?

Ans. It is the same, except that the fine and open condition of the chamois skin admits of more thorough impregnation in the fulling than does rawhide.

Cross-int. 81. What is the secondary effect in the case of chamois that you refer to?

Ans. A chemical action due to the fine subdivision of the fibres, consequent intimate admixture of the grease, and the union
248 of the two substances, fibre and grease, under the influence of the oxidation which ensues.

Cross-int. 82. That is due to a subsequent operation which takes place in the case of the chamois, but not in the other?

Ans. Yes.

Cross-int. 83. Do you consider that the same distinction, to which you have referred as existing between chamois leather and fulled rawhide, applies also in the case of other kinds of leather which are and for many years have been made by the fulling in of grease; such, for instance, as the glove leather referred to yesterday by Mr. Coupe?

Ans. The distinction holds good between rawhide and all leathers

which are tawed with grease only and contain no alum or other tanning substance.

Cross-int. 84. I understood you to state that the distinction you spoke of was due to the fineness of the fibre in the case of the chamois leather. How, then, can it apply to "all leathers," which include, of course, all leathers of all degrees of fineness or coarseness of fibre?

Ans. I referred to all leathers which are tawed by oil, grease, or fatty matter only, and my understanding is that only such which are of fine and somewhat loose fibre are capable of such tawing.

Cross-int. 85. Then, as I understand you, the distinction which you make is based solely upon the fineness or coarseness of the fibres of the hide being treated. Is that the fact?

Ans. It is generally the fact. There are limitations on each side in the two processes under consideration. If we were tawing a loose-fibred skin by fatty matter only, recourse would, of course, be had to the use of an oil which is easily oxidizable on fulling into the skin.

Cross-int. 86. Where do you draw the line between fineness and coarseness of fibre?

Ans. Hides in which the leather skin is thick on the one hand and skins in which the leather skin is thin on the other.

Cross-int. 87. Is that the best answer you can give?

Ans. That is the closest definition I can give.

249 Cross-int. 88. Does the looseness of the fibre or the porosity of the hide have anything to do with it?

Ans. I think it does.

Cross-int. 89. In your opinion, would it make any difference as to the effect of fulling grease into a hide whether that hide had had its hair removed by a sweating method or by a liming method?

Ans. If they were both thoroughly well done, I think not.

Cross-int. 90. Do you not understand that it is a fact that the effect of lime upon a hide is not only to loosen the hair, but also to swell or plump the hide, and thus render it porous and more permeable?

Ans. I do, and the reason therefor is due to the decomposition of the albuminoid matter by the lime, but the product of this decomposition, when removed by water, also removes the plumpness, and if hides are to be plumped the usual means are then resorted to.

Cross-int. 91. And do you not also know that it is a fact that a hide which has had its hair removed by a liming method, and especially if the liming process is carried far enough to kill the fatty matter, is much more open and porous than a hide which has had its hair removed by the sweating method?

Ans. I do not understand it to be the case, because the plumpness which the lime gives is lost after washing. In my direct testimony I said lime would not plump a hide, and I meant plumpness that would not be lost on the subsequent washing after liming. I do not recognize in the sweating or liming methods any advantage of the one over the other for the preparation of fulled rawhide if either is thoroughly accomplished.

Cross-int. 92. I am glad you referred to the statement in your

direct examination that lime would not have the effect of plumping the hides. I was about to ask you as to that. Do you still adhere to that statement?

Ans. Yes.

Cross-int. 93. It is your opinion, then, that lime has no effect to plump a hide or render it more porous?

Ans. None but what is lost in the subsequent washing.

250 Cross-int. 94. And that, no matter to what extent the liming is carried?

Ans. The liming may be carried to such an extent as to destroy some of the leather skin; not if it is properly done.

Cross-int. 95. Now, as a matter of fact, is it not true that the open or porous condition of chamois leather, for instance, when it is ready to go to the fulling mill to be stuffed with grease, is largely due to its having been previously highly limed?

Ans. Not that I am aware of.

Cross-int. 96. You stated in your direct examination that paraffine will not enter a hide as a stuffing except under heat, and that the degree of heat necessary is the melting point of the paraffine. Is not this also true of tar?

Ans. It is, if the tar is solid at ordinary temperatures. Tar is often liquid, and, in such condition, would not need to be heated to enter a skin.

Direct examination resumed:

Int. 97. Will a stuffing composed of one hundred pounds of tallow, fifteen pounds of tar, ten pounds of rosin, and eight pounds of beeswax, when stuffed into a hide by any possible process, have the oxidizing effects upon that hide, whether chamois skin or any other, which the oxidizing oils have about which you have testified?

(Question objected to because the witness has made no reference to oxidizing oils, but has spoken of oils, grease, and fatty matter generally.)

Ans. No.

C. TENNANT LEE.

Attest: ISAAC H. SOUTHWICK, JR.,
Special Examiner.

251 *Further Evidence for Defendants,*

Taken pursuant to the sixty-seventh rule of the Supreme Court of the United States, in equity, as amended, before me, Isaac H. Southwick, Jr., special examiner.

PROVIDENCE, R. I., *May* 15, 1888.

Present: T. L. Livermore, Esq., and J. H. Morison, Esq., of counsel for complainant; Wilmarth H. Thurston, Esq., of counsel for defendants.

Deposition of Walton C. Tiffany.

Direct examination by WILMARTH H. THURSTON, Esq., of counsel for defendants:

Int. 1. What is your name, age, residence, and occupation?

Ans. Walton C. Tiffany; thirty-eight years; New York city; analytical chemist.

Int. 2. Please state whether you have devoted your time and attention to any special branch of your profession; and, if so, to what.

Ans. Yes; to the manufacture of leather.

Int. 3. Please state what experience you have had in this special branch of your profession, stating generally what investigation you have given to the subject and what opportunities you have had for familiarizing yourself therewith.

Ans. After leaving college I was a few years with the United States Government as an expert, and for the past ten years have devoted my entire attention to the investigation of the processes employed in the manufacture of leather, and of the nature of leather when manufactured. The investigations have been generally of a chemical nature—that is, the laws of chemistry as applied to the art of leather manufacture. Aside from travelling about the country and personally inspecting the different processes of manu-
252 facture of all classes of leather, I have been employed by many tanners to counsel them in the various questions which arose as to the better way of carrying out these processes.

Int. 4. Please state whether you have had occasion to investigate and familiarize yourself with the practical working of the various processes employed in manufacturing leather, and with the various results of those processes.

Ans. I have, at the request of leather manufacturers, visited their tanneries, inspected their various departments, and, with chemical appliances and otherwise, made careful and accurate examinations.

Int. 5. Please state whether, in the course of your practice and experience, you have had occasion to make comparisons between different processes and methods and the resulting products, and whether you have been accustomed to give opinions relating thereto, and in answering the question please state whether you have been

called upon to give testimony of an expert character in suits involving questions relating to the manufacture of leather, either where letters patent were involved or otherwise.

Ans. I have made such comparisons and I have been accustomed to give such opinions. I have been called upon to give such testimony in the United States courts and other courts.

Int. 6. This suit is brought for an alleged infringement of the letters patent granted to Herman Royer, No. 149,954. Please look at a copy of that patent, which I now show you, state whether you have examined and understand the same, and what is therein described.

Ans. I have examined and understand the patent.

Int. 7. Please state whether you have examined the testimony which has heretofore been given in this case, and especially whether you are familiar with the testimony that has been given by Mr. Coupe and Mr. Royer, respectively.

Ans. Yes.

Int. 8. Will you please state what are the different methods employed for converting hides into leather for commercial use?

Ans. One class of leather is made by combining with the rawhide or skin in a suitable manner vegetable tannins; another
253 class is made by combining with the rawhide or skin, either chemically or mechanically, certain mineral compounds; another class is made by the combination, either chemically or mechanically, with the rawhide or skin of oils, fats, or grease, either vegetable, animal, or mineral, or their suitable combinations.

Hides or skins tanned with vegetable tannins alone are generally classified as leather; those combined with minerals or other combinations are called combination tannages; those combined with mineral salts, such as salts of alumina, are called tawed leather; those with oils are called oil tannages, generally known as rawhide or rawskin tannages, and this applies also to the tawed hide or skin, which is also known as raw-tanned stock.

The different processes are called vegetable tanning, mineral tanning, or tawing, and oil tanning.

Int. 9. In the case of the oil-tanned leather, how is the oil or grease worked into the hide?

Ans. It is worked in by mechanical treatment, either by hand or machinery, which is called "fulling" or stuffing.

Int. 10. Please state whether the different methods of converting hides into leather, which you have referred to, are or are not old in the art, and which of them is generally understood to have been the longest practised.

Ans. They are all old in principle. That of the treatment of rawhides with oils, grease, and fats is, in the tradition or literature of the art, considered the oldest. In prehistoric times leather was a product, which has been subsequently proved. In historic times the processes in detail have been recorded as practised by the earlier civilizations or primitive savages, such as the North American Indians, and the rubbing of fats, such as the brains or other fatty or oily portions of animals, into the rawhide by such rude appliances

as stones or similar implements is abundantly recorded by the reports of travellers or the authorized investigations of Government employees.

Int. 11. Whether or not all of the methods referred to by you were known and practised long prior to 1867.

Ans. They were generally practised prior to that time.

Int. 12. You have stated that the product of the oil or
254 grease tanning method is known as rawhide tannage or leather, and that in making this kind of leather the oil or grease is worked in by mechanical treatment, called fulling. Please state whether the product of this method may be properly called fulled rawhide and whether such fulled rawhide was known prior to 1867.

Ans. When hides are employed and so treated they may be called fulled rawhide, and such fulled rawhide was known prior to 1867.

Int. 13. You have also spoken of this product as an oil or grease tanned leather. Do you mean by this that any chemical change or union takes place between the hide or skin and the oils or grease? And in answering the question please state what was formerly thought by tanners to be the case and what is now the accepted views of chemists on the subject.

Ans. Yes; I know, and it is well known to all chemists that oil or grease will combine with the gelatine of the hide or skin, forming an insoluble compound. The tanners generally thought that the oil or grease was stuffed in mechanically and remained in the hide separate in the interfibry spaces and did not combine chemically with the gelatinous substance of the hide. The accepted views of chemists on this subject are stated above that it forms such a compound insoluble in water.

Int. 14. Please state generally what are the operations of fulling and stuffing and what is the effect upon a hide of fulling oil, tallow, or grease into a hide by mechanical means, as you have stated.

Ans. The operation of fulling and stuffing when the hide is in the condition desired, either with or without the hair, it is stretched, pulled, or pushed, or beaten or rubbed, so that the interfibres will be separated from a more compressed state, and the hide will, therefore, be in a more pliable and porous condition. It is customary, together with the process of so treating the hide, to introduce suitable oils or combinations of oils and fats and to crowd or push or full them in, so that they may more thoroughly permeate the hide throughout its entire structure. Such mechanical treatment of the hide also engenders a higher temperature in both the hide and the stuffings, which facilitates the more perfect completion of the operation.

Int. 15. State if you are familiar with what are known as
255 the sweating and liming processes respectively; and, if so, please state whether such processes are alike or different.

Ans. I am familiar with the process of liming and of sweating, and I know that, although they are both employed to loosen the

hair, that their action in doing this and otherwise is entirely different.

Int. 16. Please state what are the differences between the two processes.

Ans. The sweating process is the treatment of hides when laid or hung in confined spaces or rooms or pits where the temperature is maintained as near as possible at certain points until the roots of the hair are so affected that they become loosened and may be pushed, pulled, or rubbed off. The action is that of a putrescent decomposition. The fats and oils are only to a limited extent affected so that their subsequent entire removal is difficult, if at all, to be effected, owing to the fact that this decomposition, although acting at first on the delicate substance about the hair roots and sheaths and elsewhere, at the same time is acting upon the other portions of the hide and gradually destroying the natural qualities which might subsequently add to its durability and strength. For this reason very careful and constant attention is required to prevent the injurious excessive putrescent action, and for this reason it is only partially employed by a small proportion of the manufacturers of sole leather where heavy hides are used, and it is not employed, to my knowledge, for the removal of hair or wool from the skins of smaller animals nor where finer leathers are required from the heavier hides.

On the other hand, the liming process is very generally employed. It is considered safer to subject hides or skins to its action, as it is of a less destructive nature, slower in its action, and more easily watched. The interstructure of the hide is affected by the lime in solution and the solution cannot be stronger than a given degree slightly affected by temperature. The action, therefore, on the hides is more controllable than that of putrefaction, which is influenced by many conditions. Aside from this, it is impossible to so affect the fatty constituents of the hides by the action of the lime that they may be practically entirely removed by subsequent suitable processes and at this point the hide may still be in good condition to produce strong and durable leather. The same hide, if treated
256 by sweating and all the fats decomposed so as to be easily removed, would, to a greater or less degree, be more liable to general injury from the excessive decomposition necessary to remove the fats. Aside from this, if the further incorporation of any subsequent tannin or other substance is intended, their more even absorption will be effected on a limed hide thus cleansed than upon a sweated hide, throughout which the natural distribution of the fats in greater or less density is less completely removed.

Int. 17. It has been stated somewhere by Mr. Royer in his testimony that a hide which has been limed, drenched, and dried is in the same condition as a hide that has been sweated and dried. Please state whether you agree with Mr. Royer.

Ans. I do not. The hide treated with lime at the point where the hair will be sufficiently loosened to come off by the usual methods—scraping—will at that stage be so acted upon in its structure that the fats will be decomposed to a greater extent and more

easily moved by subsequent processes than from a sweated hide which has been decomposed to the point where the hair may be removed.

Int. 18. The last question referred more particularly to the condition that the hide would be in after it had been limed, drenched, and dried, on the one hand, and after it had been sweated and dried, on the other. Please state whether there would be any difference between two hides in these respective conditions as to the amount of fatty matters and impurities contained therein.

Ans. There would be more non-tannable substances and fatty matter in the sweated hide than in the limed hide. The natural fatty substances of hide will not combine with tannic acid and with some of the other tannins. And for the other reasons given in one of my previous answers, the fatty substance is considered by the best tanners, and for practical reasons, an objectionable element, among which the tendency to more easily decompose and injure the adjacent parts is one.

Int. 19. What is the effect of the presence of these fatty matters and impurities in a sweated hide when the hide is dried?

Ans. In a dried condition, the fatty matter present having been to a greater or less degree tainted with putrefactive action,
257 it is more readily susceptible to further destruction, not only of its inherent fatty particles, but of the surrounding substance of the hide. It is more attractive to the attacks of insects for the deposit of eggs, which germinate in worms, which feed on the fats first, and in so doing more or less affect the valuable parts of the hide, and also more attractive to rodents and other fat-eating animals. All or most all sun-dried hides brought into our markets are treated with germicidal preparations. It is noticed that where the rawhide is cleaned from these fatty impurities and made into thongs or whips, or other articles of common use, they are not attacked in the same way.

Int. 20. How is it in the case of a dried sweated hide as to these fatty matters and impurities forming a hard or horny substance in the hide?

Ans. Owing to the fact that there is more of insoluble fats combined with the natural albuminous substance in the hide structure and to the more or less liberation of the finer or more susceptible portions of the hide by decomposition, it is possible, therefore, for this combination, when dried, to form connected or unconnected layers that are difficult to penetrate or to displace by the subsequent fulling; and for this, among other reasons, the lining process is employed, so that this result may not occur. Where sweated hides are used for sole leather they are taken from the sweat-pits and, after the usual washings and manipulations to remove the hair, are placed in acid or waste tan liquors, called "plumping liquors," which have the effect to break up this objectionable feature by the action of the acid and the agitation or soluble action of the liquors, so that the objectionable portions are mainly washed out and the hides made cleaner, so that the subsequent introduction of the tanning solutions may be more uniformly absorbed; but where the sweated

hides are not treated to such acid solutions the elimination of this substance before the introduction of the stuffing is less easy to accomplish and the uniform introduction of the stuffing, as already shown in my previous answer, is prevented.

Int. 21. Whether or not in the case of a sweated hide which is to be fulled and stuffed with grease the presence of these layers
258 of hardened matter would tend to prevent the entrance or penetration of the stuffing compound.

Ans. I think it would; it would retard it and make it more difficult.

Int. 22. Mr. Royer has stated that a sweated hide cannot be distinguished from a limed hide. What have you to say to this?

Ans. That it can be very easily distinguished by its odor, by its appearance, and by feeling, by touching or handling it, and it can also be distinguished either by chemical or microscopic tests.

Int. 23. Referring to that *position* of Mr. Coupe's testimony in which he states that the fatty matter and impurities remaining in a sweated hide form, when the hide is dried, a sort of cement or hard, shelly substance, state whether you agree with Mr. Coupe, explaining what you understand by the word "cement" in that connection.

Ans. There are many words commonly used by manufacturers of leather which are not scientific terms, but are coined to express an apparent condition and which are found in the literature of the subject of tanning and are well known by those familiar with the process in the section where they are used. It is a well-known fact that pieces of green hide are converted into glue by simple treatment, the gelatine and such similar portions of the hide being soluble in water, the water being expelled, the dry, horny substance remaining as a common product of commerce. Its adhesive qualities are well known. I understand Mr. Coupe to refer to this substance when he alludes to a hard, shelly substance or cement. I agree with Mr. Coupe that that substance is present in a sweated hide to a greater extent than in a limed hide.

Int. 24. Mr. Coupe, in one or two places in his testimony, has used the word "gluten," which term has been criticised by Mr. Royer and some of his witnesses and by Mr. Royer denominated an invention of Mr. Coupe's. Please state whether the term "gluten" is or is not a term used by tanners and practical men and what is meant thereby.

Ans. This is an instance of the application of a term that cannot be strictly used in a chemical sense for the substance indicated by Mr. Coupe. It is, however, a term that I have heard used by many tanners, and it is also to be found in some of the oldest writ-
259 ings on the subject of tanning used in precisely the sense that Mr. Coupe intends. The term is employed to designate the gelatinous tissue in hides or skins with which tannic acid combines.

Int. 25. Mr. Coupe has stated that there is a gummy, tenacious substance in a sweated hide, which has been denied by Mr. Royer, who has stated that this gum also is an invention of Mr. Coupe's.

Please state whether or not there is such a gummy or tenacious substance in a sweated hide.

Ans. I have already explained in a previous answer that hides do yield a sticky, tenacious, or gummy substance, and that this substance is present in a sweated hide in a greater degree than in a limed hide.

Int. 26. Mr. Coupe also stated that the presence of the fatty matter and impurities in a sweated hide caused such hide to have a tendency to "agglutinate." Mr. Royer has criticised this statement and said that this agglutination is also an invention of Mr. Coupe's. What have you to say upon this point?

Ans. I think it is as Mr. Coupe has stated, for the reasons already given. The fibres of the hide will be more closely compacted where this substance is most abundant, and that it does exist to a greater extent in a sweated hide; it will therefore, upon its drying, be more difficult to separate these parts by subsequent manipulation, such as fulling.

Int. 27. In that connection I call your attention to the Royer patent in suit and to the statement therein that the hide is to be subjected to the process of fulling before any stuffing is applied thereto. Please state whether the condition of a sweated hide referred to by you makes this preliminary fulling, before applying the stuffing, desirable or necessary in the case of such a hide.

Ans. I don't understand how a hide in that condition can be fulled without breaking.

Int. 28. What I wanted to know was whether, in the case of a sweated hide, the preliminary fulling operation would be necessary or desirable.

Ans. I think it would be in a better condition for stuffing if properly fulled.

Int. 29. Mr. Royer has stated in effect, as I understand
260 him, that it makes no difference whether the natural fats or grease are removed from the hides or not, inasmuch as they are replaced by other grease, giving it, as his opinion, that the natural grease will have a greater effect to keep the hide soft, because intergrown with the fibres. What have you to say as to these views of Mr. Royer?

Ans. The natural grease will have no greater effect to make the hide softer. If this were so it would not be generally treated so that they may be removed. The fact that they are present in certain portions of the hides, but not equally diffused throughout the hide substance, would, if they were not removed, make an uneven distribution of the fats, oils, etc., commonly employed for certain kind of leather, and the result would be an uneven effect, as an exact blending of the fats and oils commonly used with the natural fats in the hides could not be accomplished. Again, the selection of certain fats and oils is made for their antiseptic or other properties, and it is well known that the natural oils are more liable to be affected by decomposition than the fats and oils commonly employed. For this reason fats and oils of another quality are employed.

Int. 30. State whether or not it would make any difference in the finished product whether the natural grease were thoroughly removed and replaced by other grease, or whether the natural grease were left in.

Ans. There is not sufficient quantity of the natural grease to accomplish the purpose of oil tanning or of rawhide tanning with oils. It is very important in the manufacture of this class of leather that a very even distribution of oils or fats or other stuffing be had, so that it may be equally cured, so far as possible; and it is therefore necessary, to obtain the best results, to have the preparations evenly distributed. This could not be done, as already shown in a previous answer, if the natural fats were present as they naturally exist.

Int. 31. Is there any difference between a limed hide and a sweated hide as to openness or porosity; if so, what?

Ans. Limed hide is cleaner and more porous than a sweated hide.

Int. 32. Mr. Coupe has testified that in the manufacture of his leather he employs the liming process, carrying it to a sufficient extent to enable the fatty matter and impurities to be removed,
261 but without impairing the tensile strength. Mr. Royer has stated, as I understand him, that this is a physical impossibility. What have you to say as to this?

Ans. It is not practically a physical impossibility. Millions of skins of the most tender structure, such as lambskins, kid, goat, fine calf, etc., probably more than nine-tenths of the entire product of the country of such tender, easily injured skins are so treated without detrimental results, or, in the main, of appreciable impairment of their tensile strength over other processes, such as sweating, etc. It is therefore much easier to treat heavy hides, such as are used in the manufacture of lace-leather, without the practical impairment of the tensile strength when practically and properly done by men who understand it. This has been found to be an actual result. As a matter of fact, when the lining process is properly employed, the greatest tensile strength is obtained, noticeable in belting leather and similar stock, and harness and bridle leather is mainly made from limed stock.

Int. 33. Mr. Coupe stated in his testimony that the sweating process is a decomposing and rotting process. I understand Mr. Royer to, in effect, deny this. Will you please state whether or not Mr. Coupe is correct?

Ans. Mr. Coupe's statement is correct, and it is so generally admitted to be.

Int. 34. Mr. Royer has stated that the sweating and the liming processes are equivalent, one for the other. Mr. Coupe has testified that this was not the case, except so far that both were agents for the removal of the hair. What have you to say upon this point?

Ans. I see no similarity in their action, except that each process, in its own distinct and separate way, accomplishes the depilation of the hair. The further action of the sweating is to destroy the hide; the further action of the liming is to facilitate the removal of non-

tannable substances, such as natural fats, grease, etc., and the two resulting products have differences easily distinguishable.

Int. 35. In the Royer patent it is stated that after the hide is dried perfectly hard it is inserted in water for ten or fifteen minutes. State whether such insertion would have the effect to cause the hide to lose its extreme stiffness.

262 Ans. It is my opinion that a hide perfectly dried placed in water for fifteen minutes, and especially if it were a sweated hide, that its surface only to a very limited extent would be affected by the moisture, and that in the subsequent fulling or breaking it would be irreparably injured.

Int. 36. Referring to Mr. Coupe's process, state whether the treatment by Mr. Coupe, which consists in drying the hide nine-tenths dry, or, if the hide is dried thoroughly, bringing it back to a nine-tenths dry condition by repeated dippings in water during a period of some two hours, is the same or a different treatment from that described in the Royer patent.

Ans. I consider that Mr. Coupe's treatment is distinctly different from that described in the Royer patent.

Int. 37. State whether a hide treated as described by Mr. Coupe would be in the same or a different condition from that of a hide treated as described in the Royer patent by insertion for ten or fifteen minutes.

Ans. There is a most essential difference. In the Royer treatment, as patented, the hide is not in proper condition when put in the fulling mill. It would be more liable to break, and, by the friction of the fulling, would be more liable to become heated to such a degree that the leather produced would be considerably impaired. This excessive heating of hides is one of the results to be avoided by the most careful makers of such leather. On the other hand, the Coupe treatment puts the hide in a pliable condition, thoroughly softened throughout by sufficient moisture. The Royer treatment would only soften the surface of the hide to a limited extent. The interior of the hide would be hard, dry, and resistant to the fulling process.

Int. 38. Mr. Coupe has testified that he at one time used a stuffing compound in which paraffine was one of the ingredients in place of tar, and that the paraffine served the same purpose as the tar in acting as a vehicle to help carry the other ingredients into the hide. Mr. Royer seeks to convey the impression that paraffine will not perform this office. What have you to say upon this point? And, in answering the question, you may state whether you have yourself known of the use of paraffine for this purpose.

263 Ans. It is well known to manufacturers of leather of this kind in this country and throughout the world, and frequently mentioned in the literature of the art, that a number of oils and similar substances, such as the various greases, have been used as a vehicle or aid for the introduction of tallow in a hide. It is also well known to me in my experience that paraffines have been, and are now, used for that purpose. There are different de-

grees of density in paraffines, owing to the different degrees of distillation, those of less density being employed for this purpose.

Int. 39. State whether, prior to 1867, paraffine, oils, and tar were each and all well known as vehicles to carry tallow and the heavier ingredients of stuffings into leather.

Ans. I think there can be no doubt of this fact. The literature of the subject prior to that date states that paraffine, oils, and tar were each and all used.

Int. 40. You have spoken of paraffine of different degrees of density. Please state whether such paraffines as were used for stuffing compounds were or were not odorous.

Ans. Some of them were decidedly odorous and others less so.

Int. 41. Mr. Coupe stated that he had at one time used paraffine and at another time used tar, and that the one was a substitute for the other. Mr. Royer denies this, and claims that what he calls the paraffine story of Mr. Coupe is also an invention on Mr. Coupe's part. What have you to say as to this?

Ans. I know that paraffine can be used and is used for the purpose described by Mr. Coupe, and that for this purpose one is a substitute for the other.

Int. 42. Mr. Royer has claimed in his testimony that tar is essential for the manufacture of rawhide leather? What have you to say as to this?

Ans. I do not think it is essential, and I know that good rawhide leather is made without it.

Int. 43. State whether or not stuffing compounds composed of tar and tallow, or tar, tallow, and other ingredients, were known and used for stuffing leather prior to 1867.

Ans. I know that they were from the literature of the art.

Int. 44. Please state whether or not tar serves the same pur-
264 poses when used in connection with other ingredients in a stuffing compound, in acting as a vehicle to carry in the stuffing or in keeping off rats, no matter on what kind of leather it is used, whether tanned leather, partially tanned leather, or rawhide leather.

Ans. It is my opinion that it does serve the same purposes as a vehicle and for keeping off rats.

(Adjourned.)

FRIDAY, *May* 18, 1888.

Int. 45. And whether or not the same is true as a preservative against decay.

Ans. I think it is, undoubtedly.

Int. 46. Whether or not it was known prior to 1867 that tar acted as a preservative against decay and to keep off vermin, insects, etc., and whether it was used for those purposes upon different substances.

Ans. It was well known prior to 1867 and was used for those purposes. It was used on wooden posts when put in moist places in the ground and water; largely used in the navy for the same purposes in preventing decay, and was so commonly and universally

employed for that purpose that it would take a long time to cite the details of its employment. It was also used to keep off insects, with tarred paper, either coating the paper with tar or soaking it in solution containing tar. It was also used in the same way on cloth made of vegetable and animal fibres. Such cloths have been found and recorded in the literature, where — excavations and unearthing of old and ancient deposits, such as mummies wrapped with tarred cloth, and numerous other similar employments.

Int. 47. Please state whether rats would be as likely to attack a limed hide as they would a sweated hide.

Ans. When first taken from the lime or the sweat they would undoubtedly attack the sweated hide in preference to the limed hide. The limed hide would be filled with caustic preparation at once injurious to the rats. It would cause them to refrain from continuing their attack. The sweated hide would be in the most attractive form and suitable food. The limed hide, if cleansed so that no lime would remain, and the sweated hide being suitably treated, so that both would be in suitable condition for subsequent processes,
265 the sweated hide would contain more fats and albumen and would be a better food and more attractive as a food to rats.

Int. 48. Assuming that the addition of tar to the stuffing is the only difference between the Royer patent in suit and prior patents granted to Royer, state whether such addition of tar to the stuffing would in any way change the process of converting hides into leather by fulling them and stuffing them with a stuffing compound.

Ans. It would not.

Int. 49. Referring to the Royer patent in suit, I observe that it contains the following statement: "In order to more fully understand my mode of preparing hides, I avoid the use of lime, acid, or alkali," etc. What do you understand by this statement?

Ans. I understand that he does not, in the process of depilating (or removing the hair), use lime, alkalies, or similar preparations commonly employed for that purpose.

Int. 50. Are you familiar with what is known as glove leather, chamois leather, etc.?

Ans. I am familiar with the varieties of that form of leather and the processes employed in making them.

Int. 51. Mr. Royer has stated in his answer to Int. 9 of his last deposition that glove leather, chamois leather, etc., is not fulled rawhide, but without giving any reasons for his opinion. Please state whether you agree with Mr. Royer.

Ans. Only to a certain extent. The majority of the leather made in that way is produced from skins which technically are not hides, but when produced from hides and so fulled they are fulled rawhide. The nature—that is, the constituents of chamois skins, buckskins, light hides, heavy hides are the same, and if treated with oils, grease, or fats, fulled, etc., would be fulled rawhides in the sense that the term "hides" covers all.

Int. 52. Referring further to this glove leather, Mr. Royer, on page 211 of the printed record, again states that such glove leather is not fulled rawhide, and there gives as his reason that "the mere

fulling and filling up with fish oil makes no leather and is not the leather-making principle, as is the case with fulled rawhide in question." What have you to say as to this?

266 Ans. It is an established, duly recorded, incontrovertible fact that a perfect chemical combination takes place between the hide substance and the oil, grease, or similar stuffings producing leather—that is to say, a substance insoluble in water changing the nature of the hide substance, producing oil-tanned leather.

Int. 53. Mr. Royer next states that it takes a chemical process to make glove leather, but that in his process, as I understand him, the chemical process is absent. What have you to say as to this?

Ans. It is impossible to stuff oils, fats, grease, and similar stuffings into hides or skins that are raw—that is, otherwise untanned—without a chemical combination of the oils with the hide or skin substance taking place, and for that reason, in all cases where such stuffings are brought in combination with hide or skin substance, such chemical combination must take place to a greater or less degree.

Int. 54. Referring next to the two products, to wit, glove leather and the lace-leather in question, Mr. Royer refers to a difference in tensile strength, and gives it to be inferred, as I understand him, that the tensile strength of glove leather is less by reason of oxidation. Please state whether oxidation has the effect to impair tensile strength.

Ans. It is a well-known fact among leather-makers that the process of oxidation, as employed in the manufacture of glove leather, is for the purpose of producing greater tensile strength and more enduring qualities in the leather. It is also known to me that the chemical process involved will accomp-ish this purpose.

Int. 55. Mr. Royer next refers to a difference in the softness of the two. If there is any difference in the tensile strength, on the one hand, or in softness, on the other, between this lace-leather and the glove leather (both of which, I understand you to say, are fulled rawhide, and both of which are produced by stuffing with oil, grease, etc.), to what are such differences due?

Ans. Such differences are due, first, to the nature of the hides or skins employed, and, next, to the degree to which the process is carried out.

Int. 56. In answer to Int. 76, Mr. Royer, referring to the fulling of hides with grease in the fulling stocks or fulling mill,

267 states that the hides are softened by the grease, not by the fulling action. What have you to say as to this?

Ans. I have to say that they are softened both by the fulling action and by the grease, each independent of the other and collectively.

Int. 57. How was it in the manufacture of glove leather; did or not the fulling soften the hide by mechanical action and loosen the fibres?

Ans. It did soften the hides or skins and loosen the fibres. I mean by loosening the fibres separating them from a compact, compressed

condition, as they exist in a dried state, to a condition similar to that when on the live animal, where each fibre is free to act in its respective position.

Int. 58. Mr. Royer states that in fulling hides in the fulling stocks they have been so wet with either water or something else that they are soft and pliable, and that when in that condition no amount of mechanical action will loosen the fibres. Assuming him to be correct as to the condition of the hides, do you agree with him that the mechanical action would have no effect? State what would be the case. I refer to Int. 70 of Royer's deposition.

Ans. I have read Int. 70 and Mr. Royer's reply. I do not agree with Mr. Royer's opinion, for I know mechanical action would engender warmth and that warmth would relax the pores, evaporate the moisture, and permit and aid the introduction of soaps, grease, and such substances as are commonly introduced in that way. These would replace the moisture, make chemical and mechanical combination with the hide or skin, prevent the fibres from assuming the compressed condition of a dry hide, and, as a result, they would be pliant and the whole hide softer and in better condition for use.

Int. 59. There is one question that I omitted to ask you in proper order. Mr. Coupe in his testimony stated that under some circumstances he dispensed with what he called the "sour." Mr. Royer in his answer to Int. 18 appears to deny that this can be done, and that where liming is employed the sour is always necessary. What have you to say as to this?

Ans. I have to say that the sour is immaterial; the object may be accomplished without it.

268 (The witness here states that he has used the word "hide" in several instances in this testimony to cover deerskins, buckskins, or other skins—that is to say, that as the component parts of each, skins and hides, have the same chemical nature and composition of physical properties, additional materials have similar action on both, and one term, "skins" or "hides," can be used for the other.

Counsel for Royer objects to all of the foregoing deposition where the witness states the knowledge of others than himself as to the state of the art, and where he states the contents of books as to the state of the art, and especially prior to 1867, as hearsay and inadmissible.)

Cross-examination by THOMAS L. LIVERMORE, Esq., of counsel for complainant:

Cross-int. 60. Where did you get your training as a chemist?

Ans. In the College of the State of New Jersey.

Cross-int. 61. When?

Ans. I was in the class of '71.

Cross-int. 62. Did you take a special course in chemistry?

Ans. I did. I took the scientific course, and it embraced the course in chemistry, the same as in all colleges.

Cross-int. 63. How long were you in college?

Ans. Nearly three years.

Cross-int. 64. You did not, then, take any special course in chemistry, did you?

Ans. I consider that I did.

Cross-int. 65. What other branches of learning did you pursue in your three years at college?

Ans. The higher mathematics, languages, botany, mineralogy, zoology, and allied branches.

Cross-int. 66. Did you single out chemistry as a special study or did you take so much of it only as came in the regular scientific course?

Ans. I took at college so much of it as came in the regular scientific course. I was very fond of it and gave particular attention to it outside.

Cross-int. 67. In what department were you with the United States Government as an expert?

269 Ans. Topographical.

Cross-int. 68. Were you with either department of the Government?

Ans. I was attached to the Post Office Department.

Cross-int. 69. In what did your duties as expert consist?

Ans. In the making of topographical maps from field-notes.

Cross-int. 70. Were you called an expert on the rolls of the Post Office Department?

Ans. I do not know. I did the work of an expert engineer in the compilation of an accurate map.

Cross-int. 71. Do you mean that you had the direction of making the map or were you one of a number employed under the direction of some one else?

Ans. I was one of several, each of whom had the exclusive mapping of a certain section of country and whose name was engraved on the map so made.

Cross-int. 72. Was your map passed upon by some one superior to you before it was printed?

Ans. To a limited extent it was overlooked, but usually it went from my hands direct to the engraver and was corrected by me.

Cross-int. 73. During what period were you in this work?

Ans. From about 1872 to 1876.

Cross-int. 74. State, if you please, just in what capacity and under what method of business you have devoted your entire attention to the investigation of the processes employed in the manufacture of leather and of the nature of leather during the last ten years, treating the subject chronologically.

Ans. While with the Government I had access to the Government and other laboratories and became interested in the investigation of the manufacture of leather. From all that I could learn after personal and careful inspection of a number of tanneries I believed that the subject of leather manufacture, which is more or less a chemical process, was not well understood, and I therefore made up my mind to devote my entire time and to apply my acquirements as much as possible to careful research in this direction, hoping to improve the

art and at the same time obtain compensation for such services as I might acceptably render to leather manufacturers. I went
270 to New York in 1877 and opened an office and commenced the work, which has been continually progressing since that date. I have perfected a number of improvements in the art, have personally visited tanneries in many sections of the country, and, wherever possible, have, through research, careful inspection of the details of the art, both in a practical and a scientific way, obtained such information as I may have.

Cross-int. 75. When you speak of research in a practical way do you mean that you have practically prepared hides or skins for tanning or have practically tanned them in tanneries?

Ans. I mean that I have visited tanneries, the proprietors of which have carried out the details of my direction, under my personal inspection, through the various processes necessary; that I did not myself do much of the manual labor, but that I am fitted and can do any portion of it in a practical and workmanlike manner and have so done in numerous instances, and that the results of such directions, every detail of which was directed by me and was superintended by me, were successful.

Cross-int. 76. Do you mean to say that you can with your own hands do the work and prepare all the materials for converting a hide into leather in a tannery?

Ans. As much as any one man could.

Cross-int. 77. And did you get this skill without much service in a tannery?

Ans. I got this skill by first knowing what was desired to be accomplished and an intelligent understanding of the means to be employed and after many repeated trials or efforts in numerous places.

Cross-int. 78. In your answer to Int. 11 you said that the method of converting hide into leather, which you call oil tanning, was generally practised prior to 1867. Did you state this as a fact which was known to you prior to 1867?

Ans. I stated it as a fact known to me through reputable records, such as United States patents; and it is also stated in the Cyclopædia Britfan-ica, 1857, vol. 13. I think I can state that it was known to me prior to 1867. I have seen it in practice prior to that time in Gloversville, N. Y.

271 Cross-int. 79. Describe just what you saw of this process prior to 1867.

Ans. I saw deer hides that had been limed and the hair removed stuffed with oils, which was fulled into the leather, and, after proper combination of the oil with the leather by repeated fulling and stuffing, hung up to be subsequently cut up to make into gloves and other materials for commerce.

Cross-int. 80. What was the leather called commercially that you then saw made?

Ans. Oil-tanned leather. When used for gloves it was called glove leather. When used for other purposes it was called by the name for which it was employed.

Cross-int. 81. Do you mean to say that oil-tanned deerskin went by the name of oil-tanned leather in commerce?

Ans. I do.

Cross-int. 82. And that it was sold by this name without any addition to indicate that it was deerskin?

Ans. I believe it was sometimes called buckskin. I know that it is sold in the trade for shoe leather and not called buckskin.

Cross-int. 83. Do you testify that prior to 1867 you knew of its being sold under the name of oil-tanned leather?

Ans. I was so informed by the manufacturer.

Cross-int. 84. Who?

Ans. James Kent, of Gloversville, N. Y.

Cross-int. 85. How old were you when you saw this oil tanning at Gloversville?

Ans. Seventeen (not quite seventeen) years old.

Cross-int. 86. Was that the only oil tanning of which you had personal knowledge prior to 1867?

Ans. It was.

Cross-int. 87. When you said that you knew of it prior to 1867 from United States patents did you mean that you had seen those patents prior to 1867?

Ans. I meant that I had seen them since.

Cross-int. 88. When did you first see fulled rawhide for belting or lacing?

272 Ans. To inspect it thoroughly I first saw it at the Centennial exhibition in Philadelphia. I think I saw it there.

Cross-int. 89. Of whose manufacture was it?

Ans. I do not remember.

Cross-int. 90. What do you understand is the object of taking oil-tanned leathers—such as glove leather—out of the fulling stocks after stuffing awhile with oil and partially drying and repeating the operation several times?

Ans. That the leather may be given position where the absorption of the oil will be evenly completed, and that such portions of the oil or stuffing as are not absorbed in a chemical way may become, by this more perfect exposure to the atmosphere, as much as possible oxidized and made less viscid and thereby more adhesive or permanently fixed to the inner structure of the hide or skin.

Cross-int. 91. What is the object of oxidizing the oil?

Ans. The oxidized oils produce a desirable additional waterproof covering to the fibres, and for this and for other similar purposes it is accumulated and sold in our markets, prepared by repeatedly stuffing inferior pieces of skins or hides that have been so exposed to the atmosphere and from which this oxidized product has been expressed as much as possible.

Cross-int. 92. Do you mean that in a leather like a glove leather there is any oil allowed to remain that is not chemically united with the skin?

Ans. I mean that all leathers prepared by stuffing them with oils are essentially the same as glove leather so made, and that in glove

leather the excess of uncombined oil is usually expressed. It is only a degree of this class of tanning for the purpose indicated.

Cross-int. 93. Then this oxidized oil, which forms a waterproof covering to the fibres, is chemically combined with them by the oxidation, is it not?

Ans. Not necessarily by the oxidation.

Cross-int. 94. You have said the object of oxidizing the oil was to produce a waterproof covering for the fibres and for other similar purposes, and that the uncombined oil is expelled from the leather. Does it not follow that the object of oxidizing the oil is to produce a chemical union between it and the skin?

273 Ans. The oxidation of the oils is a result of the peculiar conditions to which the oil is treated. If oils of that oxidizable nature are placed in a vessel and continuously permeated with air they may be oxidized. An oil can, however, permeate a skin in a chemical way with but slight oxidation. The oxidation is not necessary to the permeation or chemical combination with the skin.

Cross-int. 95. How do you know that the oil combines with the skin chemically without the aid of oxidation?

Ans. By treating thoroughly cleaned and pulverized hide with oils that will not oxidize, and subsequently and previously properly weighing and measuring the results; ascertaining the amount of uncombined oil, and treating the combined oil and hide powder to endeavor to recover one from the other.

Cross-int. 96. Do you think that in oil-tanning glove leather and the like skins the endeavor is to convert all the animal tissue into another substance by union with the oil?

Ans. I think that but few tanners know of this actual conversion, but they are aware of the appearance of leather when so converted; and in this, as in many other processes of leather-making, they strive to obtain certain results without knowing the proper cause of the production of such results.

Cross-int. 97. Do you think that in order to produce successful glove leather it is necessary to have all the animal substance of the skin chemically combined with the oil?

Ans. In that class of glove leather I think it is desirable to have as much of the substance of the skin combine with the oil as possible.

Cross-int. 98. Do you think that it is desirable to convert the animal substance of a hide into some other substance when preparing it for belting and lacing according to the Royer patent which is here in suit?

Ans. I think that it is impossible to place the usual stuffings into a properly prepared rawhide without a more or less complete combination of the stuffing with the hide.

Cross-int. 99. Did you ever apply a test to a beef hide treated as described in the Royer patent in suit to determine whether

274 any part of the animal substance of the hide had combined chemically with the stuffing or any ingredient of it?

Ans. I have treated a portion of a beef hide with the same ma-

terials as described in the Royer patent, No. 149,951, and have found that a combination did take place between the stuffing and the hide.

Cross-int. 100. What test did you apply to the hide after treatment?

Ans. With hot water and dilute alkali.

Cross-int. 101. What was your result?

Ans. That a considerable portion of the stuffing had combined chemically with the hide.

Cross-int. 102. How did you determine this?

Ans. By proper weighing by laboratory balances.

Cross-int. 103. Won't you give all the data you took in this test?

Ans. I am unable at this time to furnish the exact data, but can give you an outline of the test, as it is a matter of frequent experiment in our laboratory to ascertain the proportion of tannins absorbed by hides and skins.

The sample of hide to be treated is properly weighed, and is subjected to a properly weighed quantity of stuffing. They are then brought together, sample and stuffing, until as much of the stuffing is absorbed by the hide sample as seems possible, when the remaining unabsorbed portion is removed and weighed. The sample is then subjected to the further treatment of a bath of water of various temperatures, being agitated thoroughly in each. The oils and fats are recovered from these baths and properly weighed. The sample is again treated with dilute alkaline solutions for the purpose of saponifying the oils that may be reached by the permeating alkaline solutions. Knowing the quantity of the alkali present and the proportion of fats that will combine with them, and ascertaining the amount of free alkali that may be present after no further apparent yield of saponified fats from the hide, and testing these solutions for the amount of dissolved gelatine or hide substance that may have been washed from the sample to be added to the weight of the hide sample when it is removed and dried to the degree it had
275 when stuffed and inserted into the solutions, we are enabled from these sources to ascertain the increased weight or proportionate combination of the stuffing with the sample. This is a brief outline of one of the processes employed to ascertain this fact.

Cross-int. 104. Is it not possible that your alkaline solutions fail to reach all the uncombined fat or oil in this test?

Ans. It is not probable, as by duplicate tests made with very pure pulverized hide substance we are enabled to obtain duplicate tests which have heretofore shown this test to be very accurate.

Cross-int. 105. I fail to see how the application of an alkaline solution to a mass of pulverized hide soaked in oil or fat can furnish a guide by which to measure the result of applying an alkaline solution to a piece of hide which has been stuffed in the way described in the Royer patent, and I ask you how you know that your alkaline solution reached the interior of the piece of hide to take up the free fat and oil there.

Ans. It is well known that a warm alkaline solution will penetrate a piece of hide as readily as a heavier oil. Aside from this there is an affinity existing between an oil and an alkali which would induce an exact or a more thorough combination of the alkaline solution with the oil, and the resultant soluble substance would be readily washed out by the subsequent processes. The oils which are not saponified, if they exist, are recovered in the same way by acid and other suitable solutions.

Cross-int. 106. What part of the stuffing oils and fats did you fail to recover from the hide?

Ans. I think it was about one-quarter.

Cross-int. 107. You do not contend, I presume, that the test which you have described proved that any part of the hide had been converted by chemical union with the oil or fat into a substance insoluble in water, do you?

Ans. I do, for all practical purposes; as much so as vegetable tannic acid is insoluble from leather made with it as the tanning agent.

Cross-int. 108. Your test did not embrace any step which was an attempt to dissolve the hide in water, did it?

Ans. It did.

276 Cross-int. 109. Why did you not mention this in relating the test?

Ans. I thought it might be inferred from the numerous repeated and severe washings to which it was subjected and to the appreciable gain that had resulted from the insoluble addition.

Cross-int. 110. Do you mean to say that the washings to which you subjected the hide were the most effective means which you knew of to test the solubility of the hide or some part of it?

Ans. They were not the most effective for dissolving the hide, but were the most effective for dissolving it without injury; and, aside from that, it is our custom to subject the hide to a treatment of a similar nature to that which it would be subjected for useful purposes.

Cross-int. 111. Do you mean to say that you can dissolve a piece of hide without injury to it?

Ans. I mean that I can dissolve and recover for commercial purposes such a product as glue, for instance, which would be unimpaired as a gelatinous tissue; but I could not, of course, restore such solution to its primitive arrangement and condition. I cannot dissolve a piece of hide from its natural condition and restore it to its natural condition.

Cross-int. 112. You have said that the washings which you applied to the hide were the most effective for dissolving it without injury, and I now ask you again if it is possible to dissolve a piece of hide without injury.

Ans. I meant by "it" the combination of the oil with the hide, which I found to be an insoluble substance, practically, in warm baths and dilute alkali solutions. I could not dissolve a hide substance without injuring it as a hide, *per se*.

Cross-int. 113. Did you take any step to see how much of the piece of hide was soluble?

Ans. I did.

Cross-int. 114. What step?

Ans. By weighing the amount present in the distilled water used.

Cross-int. 115. But you did not take the most effective measures to dissolve all the hide that was possible, you have already said; and how can you say that without this you tried to find out just how much of the hide was soluble?

277 Ans. I took the most effective measures to ascertain the practical results upon leather so made of the atmosphere and such conditions as it might be subjected to in use. We do not take arbitrary measures to ascertain other than practical facts.

Cross-int. 116. Will you now answer my question, which is: How can you say that, without taking the most effective measures to dissolve all the hide that was possible, you tried to find out just how much of the hide was soluble?

Ans. I only desired to know how much was soluble in distilled water. The dilute alkalies was one step further. I had no desire for the purposes intended to subject it to any other tests. I deemed them suitable, for the reasons already given in my previous answer.

Cross-int. 117. You could have found out how much of the hide was soluble by boiling in water, could you not?

Ans. I did carry it to that point, and did or intended to intimate that when I stated that I subjected it to water heated to various temperatures.

Cross-int. 118. Did you subject the hide to boiling for a long enough time to see how much of it could by possibility be dissolved?

Ans. I think I did, although I did not carry the boiling test for a very long time. I did not consider it a practical test for the purpose intended, to keep up a protracted boiling.

Cross-int. 119. Why?

Ans. Because the hide so treated would not in ordinary use be subjected generally to such treatment.

Cross-int. 120. Do you mean that you intended your test merely to correspond to what the hide would be subjected to in ordinary use?

Ans. As to the point of its impairment by moisture, I did.

Cross-int. 121. Then you really did not try to find out how much of the hide was soluble in the laboratory, did you?

Ans. I did, so far as practical purposes, to which it might be ordinarily placed, warranted.

Cross-int. 122. You do not answer my question. I ask you whether you tried to find out how much of the hide could be dissolved in the laboratory, and you reply that you did, so far as practi-

278 cal purposes, to which the hide might be placed, warranted. I do not ask you anything about what would happen to the hide in ordinary use; but I do ask you, as a chemist, if you are willing to answer in that role, whether you tried to find out how

much of the hide could be dissolved by the most effective methods of the laboratory.

Ans. I did not, for this reason: It is a custom among leather-trade chemists abroad, and so published in the technical works on the subject, that given tests shall be made to ascertain certain conditions in the tanning of leather. The customs are so practical and sensible that where we can conscientiously follow them we do so, in order that the results of such experiments may be intelligently understood, each by the other; and such rules are not confined to leather-trade chemists, but are generally adopted in analyzing any manufactured or natural substance by all analytical chemists, and this applies to the case in point, where we desired to know only if the combination of the stuffing and leather produced a practically insoluble substance. It is understood by leather-trade chemists that insoluble substance refers to the test that we made.

Cross-int. 123. And you, having tried to recover all the oil and fat from a piece of hide and having succeeded in recovering about three-fourths of it without applying any other test, to see whether the piece of hide could be totally dissolved, felt warranted by this custom which you cite in testifying here that some part of the piece of hide was converted into an insoluble substance. If this is not so, what did warrant you in so testifying?

Ans. Nothing warranted me except the reasons that I have cited, that the sample was practically insoluble by the combination with it of a portion of the stuffing.

Cross-int. 124. Have you ever seen hides stuffed and fulled according to the method described in the Royer patent here in suit?

Ans. I have not.

Cross-int. 125. In answer to Int. 23, you said that green hide could be converted into glue, and that you understood Mr. Coupe to refer to this as the cement which is present in a sweated hide. Do you think any part of a sweated hide is converted into glue by the sweating?

Ans. As sweated hides are hung in damp places where a
279 temperature of sixty or seventy degrees is maintained, I believe that some of the substance is converted into a sticky, glue-like, and for all practical purposes gluey substance, and that in sweated hides this dissolved or viscid albumen and gelatine exist in this state to a greater extent than in a limed hide.

Cross-int. 126. Can glue be produced without boiling?

Ans. To a small extent, I think it can.

Cross-int. 127. How?

Ans. When a hide is subjected to a moist heat at a temperature of seventy and by the decomposition thereby engendered.

Cross-int. 128. Do you think glue is produced by decomposition?

Ans. I do.

Cross-int. 129. You have said, in answer to Int. 29, that if it were not the fact that natural grease in a hide does not have a greater effect than grease stuffed in, hides would not be generally treated so that they may be removed. I assume that by "they" you meant

the natural greases, and I ask in what processes are they generally removed, as you stated.

Ans. I meant that the natural fats are not generally considered by tanners, as they exist in the hides, to be an advantageous element, for the reason that they are more liable to decay than those which are commonly employed, and for the further reason that they are not uniformly distributed throughout the hide, and if left in would prevent an even and uniform distribution of the stuffing usually employed. They are therefore generally acted upon by the liming process and removed by subsequent treatment.

Cross-int. 130. What fats and oils are used for their antiseptic properties?

Ans. Mineral fats and oils, and such cleanly rendered animal and fish oils as are the least liable to spoil. A great many people use antiseptic preparations in the oils to preserve them from destruction as much as possible.

Cross-int. 131. What is the article to which you have referred in your deposition under the name of paraffine?

Ans. It is a product of the distillation of mineral oil, and is sold in the markets in different degrees of density; as an oil known
280 as paraffine oil, and also as a mixture still denser, up to the point where it becomes solid paraffine; which term is now coming to be more generally applied to the solid product, and is applied to the less dense products as paraffine oils.

Cross-int. 132. Do you mean that in your testimony you have referred to both the oil and the solid under the same name?

Ans. In my testimony I referred to the paraffine oils of lesser density than the solid preparation. They are used in connection with tallow and similar stuffings.

Cross-int. 133. Who makes rawhide leather without tar?

Ans. As a consulting chemist to a number of the largest manufacturers of lace-leather in this country, I have received from them confidential statements as to the details of their processes and the materials employed, and have pledged myself and those in my employment not to divulge the details to another manufacturer nor to any one else. The success of my business depends upon my thus treating my customers, and I beg to be excused from answering the question.

Direct examination:

Int. 134. Have you seen hides fulled and stuffed by Mr. Coupe's method, as described in his testimony in this case?

Ans. I cannot say that I have in all its details, but have in its essential parts.

WALTON C. TIFFANY.

Attest: ISAAC H. SOUTHWICK, JR.,
Special Examiner.

Counsel for defendants give notice that they will refer at the hearing to vol. XIII of the Encyclopedia Britannica, edition of 1857, and especially to the article on "leather" therein.

Also to a work entitled "The Arts of Tanning, Currying, and Leather-Dressing, edited from the French of J. De Fontenelle and F. Malepeyre, with numerous emendations and additions by Campbell Morfit. Published in Philadelphia, by Henry Carey Baird, 1852."

Attest: ISAAC H. SOUTHWICK, Jr.,
Special Examiner.

281 DEFENDANTS' EXHIBIT ROYER FILE-WRAPPER. I. H. S., Jr., Sp'l Ex'r.

94 Chambers street, P. O. box 4544.

NEW YORK, *Dec'b'r* 30, 1872.

To the Commissioner of Patents, Washington, D. C.

SIR: Please find enclosed $45 (P. O. O.) and application for patent by Herman Royer for imp'd process for leather belting & lacing. The ingrediences, being common tallow, rosin, & wood, are thought not required for the office. Sample of the leather is mailed to the office, also application for patent for reproduction of force by F. A. Guthrie. Drawing is mailed to the office.

The applicant desire- to present application without model, which is t-ought unnecessary; also application for patent by J. T. Barr for imp'd hub. The drawing and model are mailed to the office this day.

Very respectfully, HENRY GERNER.

Petition.

To the Commissioner of Patents:

Your petitioner prays that letters patent may be granted to him for the invention set forth in the annexed specification, and he hereby appoints Henry Gerner, general manager of the United States Patent Right Association, 94 Ch'b's street, New York city, his attorney, with full power of substitution and revocation, to prosecute this application, to make alterations and amendments therein, to receive the patent, and to transact all business in the Patent Office connected herewith.

H. ROYER.

282 *Oath.*

STATE OF CALIFORNIA, } ss:
City and County of San Francisco, }

Herman Royer, the above-named petitioner, being duly sworn, deposes and says that he verily believes himself to be the original and first inventor of the improvemen- in belting, lacing, and ropes of leather described in the annexed specification; that he does not know and does not believe that the same was ever known or used, and that he is a citizen of the United States of America.

H. ROYER.

Sworn to and subscribed before me this sixteenth day of November, A. D. 1872.

[L. S.] E. V. SUTTER,
Notary Public.

Specification.

Describing an [improved process of preparing leather]* improvement in the treatment of rawhide, especially for the use of belts and laces, invented by Herman Royer, of San Francisco, county of San Francisco, State of California.

After the removal of the hair from the hide by means of sweating, a process familiar to every tanner, the hide is dried perfectly hard.

Then it is inserted in water for ten to fifteen minutes, long enough to lose its extreme stiffness. In this condition the process of fulling is commenced [with].† This may be done in a machine constructed for this purpose and patented by me May the twelfth, 1868, under No. 77920. [The action of this machine is a progressing short bend or fracture produced upon the hide, starting from the fastened end and advancing towards the loose end. (This action produces what is termed leather.)‡ The part of the hide which has been fastened to the shaft of the machine remains raw, and for the
283 purpose of (also converting this part into leather)§ fulling this portion another part of the hide is fastened to the shaft and the raw part operated upon.]‖ Before the hide is passed into the machine the second time it is stuffed with a mixture of twenty parts tallow, two parts wood tar, and one part rosin. About two pounds of this mixture is put on a steer-hide in a warm liquid state with a brush. After the hide leaves the machine the second time it [is thoroughly formed into leather].¶ It is then moistened with water four or five times during the day. The next day it is stretched and cut into pieces suitable for belting.

For purposes of lacing the thinnest hides are selected, and after they have gone through the same mode of treatment as hides for belting they are shaved, oiled, and hung up to get perfectly dry, when the hide is cut into strings. In order to more fully understand my mode of [making leather]** preparing hides, I avoid the use of lime, acid, or alkali, for just to the amount a hide is impregnated with such substances it suffers in its tensile strength and

---

* Matter in brackets erased and erase and "insert 1, amendment, Oct. 30, 1873," written in red ink in the margin.

† Matter in brackets erased and "3 amendment, Oct. 30, 1873," written in red ink in the margin.

‡ Matter in parenthesis erased and "2 amendment, Oct. 30, 1873," written in red ink in margin and erased.

§ Matter in parenthesis erased and "4 amendment, Oct. 24, 1873," written in red ink in the margin.

‖ Matter in brackets erased and "erase, see amendment, Nov. 14, 1873," written in red ink in the margin.

¶ Matter in brackets erased and "insert 5, amendment, Oct. 30, 1873," written in red ink in the margin.

** Matter in brackets erased and "6 amend't, Oct. 30, '73," written in red ink in the margin.

toughness; a slow but constant dissolution is going on with hides so impregnated. If the effects of the aforesaid substances are in some way neutralized, which must be a chemical one, the hide suffers again in this process. The power to resist abrasion and the extreme tensile strength for which pure rawhide is noted are irreparably lost. [The process above described has no such effect. The process of making leather upon a sole mechanical principle is not new—it is essentially the mode of the Indians and other barbarous nations—but the stuffing with the above-named substances is new and originates with myself; the stuffing with the mixture first makes the leather perfect.] * The tallow has the effect of im-
284 parting a high degree of elasticity and keeps the moisture; the wood tar prevents dogs, cats, mice, vermin, etc., from attacking the [leather] hide, at the same time causing the tallow to enter the hide quickly and thoroughly; the rosin gives the [leather] † belting a certain solidity and glossy appearance, and assists also in preventing animals and vermin from attacking the [leather] ‡ belting. Belts and lacing made of such prepared [leather] § hide are in all respects stronger, more lasting, and cheaper than those made from common leather.

Having thus fully described my invention, I desire to claim: [The use of a mixture of wood tar, rosin, and tallow applied to hides made into leather by a mechanical process, substantially as and for the purpose hereinbefore set forth.] ‖

This specification signed this 30 day of November, 1872.

H. ROYER.

Witnesses:
E. V. SUTTER.
WILLIAM FIRDERER.

U. S. PATENT OFFICE,
WASHINGTON, D. C., *Jan.* 4, 1873.

Herman Royer, care Henry Gerner, 94 Chambers St., N. Y. city:

Please find below a communication from the examiner relative to your application for a patent for "preserving leather," &c.

Filed Dec. 31, 1872.

Very respectfully,

——— ———,
Commissioner.

Examiner's Room No. 95.

The combination of ingredients set forth in the application above cited is found to have been applied to leather for similar pur-

* Matter within brackets erased. "Erase and insert A, June 11, 1873," written in red ink in the margin.

† Word within brackets erased and word "hide" inserted, and "7 amend't, Oct. 3, '73," written in red ink in the margin.

‡ Word within brackets erased and word "belting" inserted.

§ Word within brackets erased and word "hide" inserted, and "8 Oct., 1873," written in red ink in the margin.

‖ Matter in brackets erased. "Erase and insert B, June 11, 1873," written in red ink in the margin.

285 pose, as shown in patent to C. G. Brand of Apr. 25, 1848; also rejected application of S. R. Bissel, filed Dec. 7, 1867.

Patent refused.

C. M. PARKS, *Ex.*
J. P. CHAPMAN, *Ass't Ex.*

SAN FRANCISCO, *April* 15, 1873.

SIR: I hereby appoint Lemuel W. Serrell, New York, my agent and attorney in relation to my application for improvement in tanning, and revoke a previous power of attorney given in this case, and authorize him or his substitute to do whatever may be necessary in the premises as fully and entirely as I could do if personally present and to receive the patent when granted.

Respectfully yours, H. ROYER.

Hon. Commissioner of Patents.

NEW YORK, *June* 10, 1873.

To Hon. Commissioner of Patents.

SIR: In the matter of the application of H. Royer for a patent on preparing leather for belts, filed Dec. 31, 1872, I amend the specification by erasing the following portion: "The process of making leather upon a sole mechanical principle is not new. It is essentially the mode of the Indians," &c., down to and including "leather perfect," and inserting—

["I am aware that hides and skins have been prepared by a fulling or bending operation to render them pliable, but this mode alone does not answer for the preparation of machine belts and lacing. It is necessary to make use of a preparation substantially such as before described to render the rawhide fit for use and durable."]*

By erasing the claim and inserting—

[First. The mode herein specified of preparing rawhides
286 for machine belts, lacing, or ropes by the fulling or bending operation and the preserving mixture, substantially as set forth.] †

[Second. A belt or rope of rawhide prepared in the manner and with the materials specified as a new article of manufacture.] ‡

Yours respe't., H. ROYER,
Per L. W. SERRELL, *Att'y.*

U. S. PATENT OFFICE,
WASHINGTON, D. C., *June* 16, 1873.

Herman Royer, care Lemuel W. Serrell, New York city:

Please find below a communication from the examiner in charge

---

* Matter in brackets enclosed in red ink. "Insert A," written in red ink in margin.

† Matter in brackets enclosed in red ink. "B" written in red ink in margin. "Erase and insert 9, amendments, Oct. 30, 1873, written in red ink across face.

‡ Matter in brackets erased and marked in red ink, and "C, am'd't, Oct. 11, '73," written in red ink in margin.

of your application for a patent for "preparing leather for belts, etc.," filed Dec. 31, 1872.

Very respectfully,

——— ———,
Commissioner.

Examiner's Room No. 95.

Upon further consideration of the matter above cited in connection with amendment of the 11th inst. it is apparent that the only feature of novelty presented not embraced in applicant's original patent granted May 12, 1868, is the addition of "tar" and "rosin" as ingredients to the compound for preserving leather.

In addition to references cited in official letter of Jan. 4, 1873, patent to Joshua Miller for "Compound for stuffing leather," granted March 8, 1870, will be found to embrace the ingredients for which protection is sought in this application.

The use of such compound in the manufacturing process would not leave a distinguishable feature in the article when placed in market.

A patent is refused.

J. G. PARKINSON, *Ex.*
J. P. CHAPMAN, *Ass't Ex.*

287

119 AND 121 NASSAU STREET,
NEW YORK, *Oct.* 9, 1873.

To Hon. Commissioner of Patents.

SIR: In the matter of the application of H. Royer for a patent on preparing fulled rawhide, that gentleman writes me from San Francisco, giving an extended account of the superiority of the material prepared according to his plan, and feeling aggrieved at the rejection of his application.

I shall be obliged by a review of the case and consideration of the following summary condensed from his letter:

The use of tallow and tar upon leather are admitted to be old, but rawhide fulled is not leather, and these materials act with the fulled rawhide very different to what they do with leather, and the rawhide fulled and prepared with such material is superior to that prepared under his former patent. He believes himself to be the first to have made this superior article, and that he is fully entitled to a patent.

Upon examination of the specification, I believe it covers just what he wants, but I shall be obliged by any suggestion should amendment be needed. I think it preferable to erase the [second claim, which is hereby struck out],* and it is hoped this case may receive favorable consideration.

Resp. yours,

LEMUEL W. SERRELL,
Att'y for H. Royer.

---

* Matter in brackets underlined with red ink. "C" quoted in the margin.

EXAMINER'S ROOM No. 95,
U. S. PATENT OFFICE,
WASHINGTON, D. C., *Oct.* 17, 1873.

Herman Royer, care Lemuel W. Serrell, New York city.

"Preparing leather for belts." Filed Dec. 31, 1872.

In response to attorney's letter of the 6th inst., in the ap-
288 plication above cited, applicant is informed that a claim for the treatment of "rawhide" in manner, etc., as described, independent of the process at present included, for which protection has already been granted, might receive favorable consideration.

It is proper to add that the body of the specification should be amended, with the view to presenting a claim of the character referred to.

J. P. CHAPMAN, *Ass't Ex.*

J. G. PARKINSON, *Ex.*

119 AND 121 NASSAU STREET,
NEW YORK, *Oct.* 29, 1873.

To Hon. Commissioner of Patents.

SIR: In the matter of my application for a patent on preparing rawhide, filed Dec. 31, 1872, I amend the specification as follows:

1. Erase title and insert ["improvement in the treatment of rawhide"].*

2. Also erase ["this action produces what is termed leather"],† page 1, lines 23 and 24.

3. Page 1, line 15, erase ["with"] and insert ["this may be done in a"].‡

4. Insert ["fulling this portion"] instead of ["also converting this part into leather"], § page 2, lines 3 and 4.

5. Insert ["ready for the next operation"] instead of ["is thoroughly formed into leather"], ‖ page 2, line 15.

289 6. Insert ["preparing hides"] instead of ["making leather"],¶ page 5, lines 4 and 5.

7. Insert ["belting"] instead of ["leather"], page 4, lines 15 and 19.**

---

* Matter in brackets underlined in red ink and "1" written in red ink in the margin.

† Matter in brackets underlined in red ink and "2" written in red ink in the margin.

‡ Matter in brackets underlined and enclosed in red ink and "3" written in red ink in the margin.

§ Matter in brackets enclosed and underlined in red ink and "4" written in red ink in the margin.

‖ Matter in brackets enclosed and underlined in red ink and "5" written in red ink in the margin.

¶ Matter in brackets enclosed and underlined in red ink and "6" written in red ink in the margin.

** Matter in brackets enclosed and underlined in red ink and "7" written in red ink in the margin.

8. Insert ["hide"] instead of ["leather"],* page 4, line 21.

9. By erasing the claim and inserting: I claim as my invention—[The treatment of the prepared rawhide in the manner and for the purposes set forth.] †

H. ROYER,
Per L. W. SERRELL, *Att'y.*

EXAMINER'S ROOM No. 95,
U. S. PATENT OFFICE,
WASHINGTON, D. C., *Nov.* 10, 1873.

Herman Royer, care Lemuel W. Serrell, New York city.

Preparing leather for belts, etc. Filed Dec. 31, 1872.

In further consideration of this case with a view to final action, the erasure of all on page 1, commencing immediately after figures "77,920," in line 17, and including the first six lines of the second page, ending with the word "upon," in the sixth line, is suggested.

This portion of the specification refers to the operation of a machine protected by another patent, and is in no way necessary to a proper elucidation of this invention or discovery.

J. P. CHAPMAN, *Ass't Ex.*

J. G. PARKINSON, *Ex.*

290 NEW YORK, *Nov.* 12, 1873.

To Hon. Commissioner of Patents.

SIR: In compliance with the official letter of 10th inst., I amend my application for a patent on [preparing leather for belts, etc.], filed [Dec. 31, 1872], by erasing from the specification [all on page 1, commencing immediately after figures 77,920, in line 17, and including the first six lines of the second page, ending with the word "upon"],‡ in the sixth line.

HERMAN ROYER,
Per LEMUEL W. SERRELL, *Att'y.*

OFFICE FOR PATENTS,
119 & 121 NASSAU STREET,
NEW YORK, *April* 16, 1874.

SIR: Enclosed herewith I send twenty dollars, balance of fee on Herman Royer's application for letters patent for preparing rawhide for belting.

Allowed Nov. 22, 1873.

The patent when issued you will please forward to my care.

Respectfully yours, LEMUEL W. SERRELL.

Hon. Commissioner of Patents.

---

* Matter in brackets enclosed and underlined in red ink and "8" written in red ink in the margin.

† Matter in brackets enclosed in red ink and "9" written in red ink and "L. W. S." written in black ink in the margin.

‡ Matter in brackets underlined in black ink.

U. S. Patent Office.

Application of H. Royer.

Filed Dec. 31, 1872.

Contents of this File.

1. Application.
2. Rej. Jan 4, 1873.
3. [Amendment, Jan. 11, 1873.] *
4. Rej. June 10, 1873.
5. [Am'd't, Oct. 11, 1873.] *

291 6. Office letter, Oct. 17, 1873.

7. [Amendment, Oct. 30, 1873.]*
8. Office letter, Nov. 10, 1873.
9. [Amendment, Nov. 14, 1873.] *

$\frac{3055}{119}$

1872 92 PARKS.

No. 149,954.

HERMAN ROYER,
Of San Francisco,
County of "
State of California.

PREPARING LEATHER FOR BELTS, ETC.

Rec'd Dec. 31, 1872.
Petition " " "
Affidavit " " "
Specification " " "
Drawing } None required.
Model }
Cert. dep.
1. Cash $15, Dec. 31, 1872.
Add'l fee cert.
1. Cash $20, April 17, 1874.
Examined Nov. 20, 1873. J. G. PARKINSON.
2. Issue Nov. 21, 1873. KNIGHT.
3. Patented, April 21, 1874.
Recorded, vol. page
Circular, Nov. 22, 1873.

LEMUEL W. SERRELL,
New York city, N. Y.

292 1873.

Rejected, Jan'y 4, 1873.
Rejected, June 16, 1873.
Letter, Oct. 17, 1873.
Letter, Nov. 10, 1873.
Ex'd: J. A. W., M. McK.
Improvement in the mode of preparing rawhide for belting.

* Matter in brackets written in red ink.

293 UNITED STATES PATENT OFFICE.

HERMAN ROYER, of San Francisco, California.

Improvement in the Modes of Preparing Rawhide for Belting.

Specification forming part of Letters Patent No. 149,954, dated April 21, 1874; application filed December 31, 1872.

To all whom it may concern:

Be it known that I, Herman Royer, of San Francisco, county of San Francisco, State of California, have invented an improvement in the treatment of rawhide, especially for the use of belts and laces, of which the following is a specification:

After the removal of the hair from the hide by means of sweating—a process familiar to every tanner—the hide is dried perfectly hard. Then it is inserted in water for ten to fifteen minutes, long enough to lose its extreme stiffness. In this condition the process of fulling is commenced. This may be done in a machine constructed for this purpose and patented by me May 12, 1868, under No. 77920. Before the hide is passed into the machine the second time it is stuffed with a mixture of twenty parts tallow, two parts wood-tar, and one part rosin. About two pounds of this mixture is put on a steer hide in a warm liquid state with a brush. After the hide leaves the machine the second time, it is ready for the next operation. It is then moistened with water four or five times during the day. The next day it is stretched and cut into pieces suitable for belting. For purposes of lacing the thinnest hides are selected, and after they have gone through the same mode of treatment as hides for belting, they are shaved, oiled, and hung up to get perfectly dry, when the hide is cut into strings. In order to more fully understand my mode of preparing hides I avoid the use of lime, acid, or alkali, for just to the amount a hide is impregnated with such substances it suffers in its tensile strength and toughness; a slow but constant dissolution is going on with hides so impregnated. If the effects of the aforesaid substances are in some way neutralized, which must be a chemical one, the hide suffers again in this process. The power to resist abrasion, and the extreme tensile strength for which pure rawhide is noted, are irreparably lost.

I am aware that hides and skins have been prepared by a fulling or bending operation to render them pliable, but this mode alone does not answer for the preparation of machine belts and lacing. It is necessary to make use of a preparation substantially such as before described to render the rawhide fit for use and durable.

The tallow has the effect of imparting a high degree of elasticity and keeps the moisture. The wood-tar prevents dogs, cats, mice, vermin, &c., from attacking the hide, at the same time causing the tallow to enter the hide quickly and thoroughly. The rosin gives the belting a certain solidity and glossy appearance, and assists also in preventing animals and vermin from attacking the belting.

Belts and lacing made of such prepared hide are in all respects stronger, more lasting, and cheaper than those made from common leather.

Having thus fully described my invention, I desire to claim—

The treatment of the prepared rawhide in the manner and for the purposes set forth.

This specification signed this 30th day of November, 1872.

H. ROYER.

Witnesses:

E. V. TUTTER.

WILLIAM FIRDERER.

295 UNITED STATES PATENT OFFICE.

WILLIAM COUPE, of South Attleborough, Massachusetts.

Improvement in Machines for Boarding or Breaking Rawhides.

Specification forming part of Letters Patent No. 199,415, dated January 22, 1878; application filed November 12, 1877.

To all whom it may concern:

Be it known that I, William Coupe, of South Attleborough, county of Bristol, and State of Massachusetts, have invented a new and improved machine for boarding or breaking rawhides, of which the following is a specification:

In the accompanying drawings—

(Here follows diagram marked p. 294.)

Figure 1 represents a side elevation, partly in section, of my improved machine for boarding or breaking rawhides. Fig. 2 is a plan view of the same, and Fig. 3 a vertical transverse section on line *x x*, Fig. 2, through one of the cribs.

Similar letters of reference indicate corresponding parts.

The object of this invention is to provide, for the purpose of treating rawhides in place of tanning them, an improved machine by which the hides may be "boarded" or broken by mechanical means solely, without the employment of moisture and chemical agents, the machine finishing the hides in rapid manner, and requiring but one attendant to supply and remove the hides from the cribs.

The invention will first be described in connection with the drawings, and then pointed out in claims.

Referring to the drawings, A A are a number of cribs, that are arranged equidistant from and radially to a common center. The cribs A are formed of stationary heads B, of disk shape, which are supported on suitable standards. The outer stationary heads B are provided, at some distance from their center, with short guide-slots *a*, and the inner heads with corresponding socket-recesses *a'* for the cross-bars *b*, that extend from head to head, and are adjusted nearer to or farther from the center by set-screws *d*. The heads B are

No. 41a
Royer
v.
Coupe & Co. } p. 294.

W. COUPE.

Machine for Boarding or Breaking Rawhide.

No. 199,415. Patented Jan. 22, 1878.

Fig: 1.

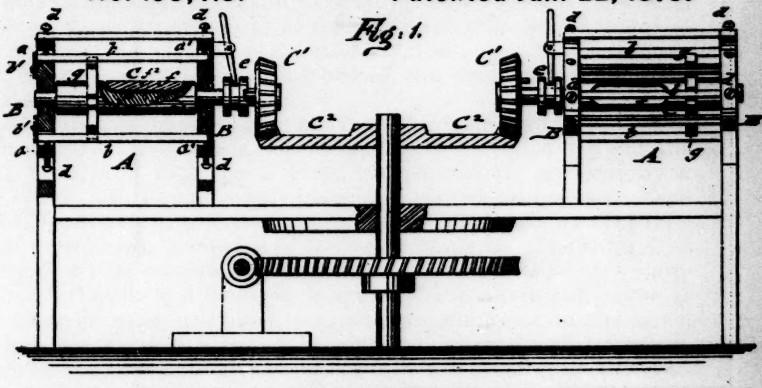

Fig: 2.

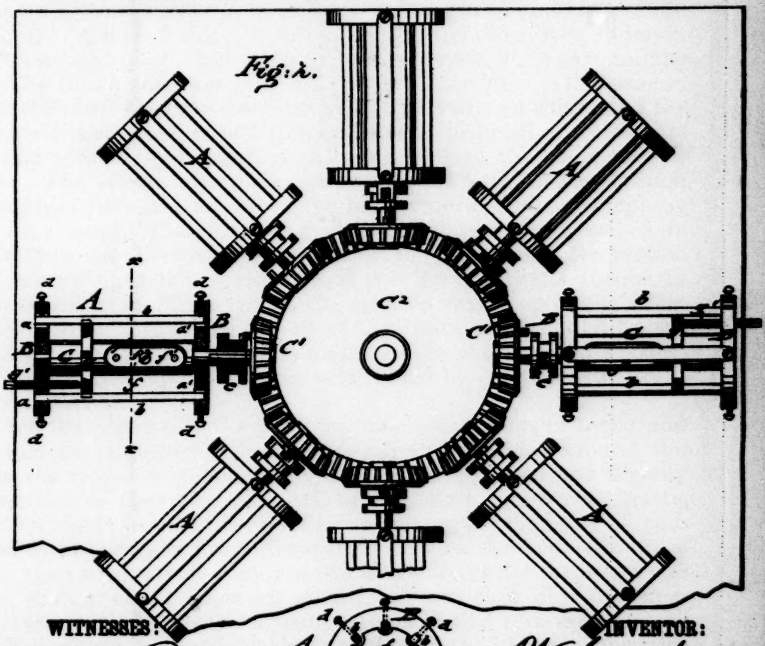

WITNESSES:

Chas. Nida

J. H. Scarborough.

Fig: 3.

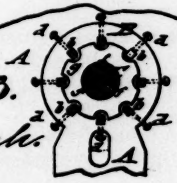

INVENTOR:

W. Coupe.

BY Munn & Co

ATTORNEYS.

stiffened or braced at their top part by connecting rods or bars of suitable strength, to prevent any springing or spreading of the heads. The cross-bars *b* of the cribs are inserted from the outside through the slots of the outer heads, and placed into the recesses of the inner heads, as shown in section in Fig. 1, and then retained in this position by pivoted end plates or buttons *b'*, that close two adjoining slots, *a*, and prevent the playing out of the cross-bars during the working of the machine.

Each crib A is provided with a revolving center-shaft, C, that turns in bearings of the heads, the shaft being extended beyond the inner head, and carrying a loose bevel-wheel, C', revolved by a worm-gear from a power-shaft with suitable reversing-gear. Each shaft C is thrown in or out of gear with the bevel-gear by a separate clutch mechanism, *e*, outside of the inner heads B. The shaft C is arranged at that portion between the heads, with detachable clamp-sections *f*, that fit into concave recesses of the shaft, and serve to attach two or more rawhides, according to their size, to the same, and hold them firmly clamped by means of spurs f^1 and fastening-screws f^2. When the rawhides are thus firmly attached to the shaft the same is thrown into gear, and the hides are wound up around the same. A false head, *g*, with recesses for the cross-bars, slides on each shaft, and is adjusted laterally by a set-screw, *g'*, so as to confine the hides into a narrower compass. When the hides are thus wound up on the shaft the cross-bars are tightened down on them, and the next shaft is supplied with hides, and so on until all the cribs are full, and revolve by being thrown into gear with the center bevel-wheel. The pressure of the gradually-tightened cross-bars (which are rounded off at the inside) on the hides produces the tight lapping of hides around the shaft. When the hides have been revolved in the cribs in one direction for a sufficient length of time, the motion of the operating-gear is reversed, and thereby the shafts turned in opposite direction. This causes the forcible reversing of the hides from the shaft to the outside, and as the hides are retained by the cross-bars and the false and permanent heads, the so-called "boarding" or breaking up of the same is obtained by the powerful strain exerted thereon.

When the position of the hides on the shafts is thus changed, and the same are lapped in opposite direction to the former around the shafts, the motion of the driving-gear is again reversed, and thereby the position of the hides changed, in the same manner as before, from the inside to the outside, which reversing or changing is continued until the hides are sufficiently boarded or broken. They are then successively removed from the cribs by throwing one shaft after the other out of gear, and are thus obtained in a tanned state, ready for being cleansed and scraped, the tanning being thus obtained by the exposure of the hides to powerful mechanical action in place of the treatment by chemical agents, as heretofore.

296

The apparatus is readily attended by one or two workmen that charge or empty the cribs successively, being capable of finishing

the hides in a quicker, superior, and more economical manner than by the tanning processes heretofore employed.

Having thus fully described by invention, I claim as new and desire to secure by letters patent—

1. The combination of the outer heads provided with guide-slots *a*, the inner heads with socket-recesses *a'*, the cross-bars *b*, pivoted buttons *b'*, and set-screws *d*, as and for the purpose set forth.

2. The combination, in a crib for breaking rawhides, of the outer slotted and inner recessed heads, with retaining cross-bars supported in the heads, and with pivoted plates or buttons of the outer heads, for securing the rigid position of bars, substantially as described and specified.

WILLIAM COUPE.

Witnesses:
PAUL GOEPEL.
C. SEDGWICK.

298 UNITED STATES PATENT OFFICE.

WILLIAM COUPE, of South Attleborough, Massachusetts.

Improvement in Machines for Boarding and Breaking Raw Hides.

Specification forming part of Letters Patent No. 202,414, dated April 16, 1878; application filed March 22, 1878.

To all whom it may concern:

Be it known that I, William Coupe, of South Attleborough, in the county of Bristol and State of Massachusetts, have invented a new and improved machine for boarding or breaking raw hides, of which the following is a specification:

In the accompanying drawing—

(Here follows diagram marked p. 297.)

Figure 1 represents a side elevation of my improved machine for boarding or breaking raw hides; Fig. 2, an end view; and Fig. 3, a vertical transverse section of the same on line *x x*, Fig. 1.

Similar letters of reference indicate corresponding parts.

This invention relates to such improvements in the machine for boarding or breaking raw hides for which letters patent have been granted to me heretofore, under date of January 22, 1878, and numbered 199,415, so that the hides may be still more effectively boarded or broken, the cribs in which the hides are worked being capable of exact adjustment to the number and size of the hides, so as to fully control the degree of boarding to which they are to be exposed.

The invention consists of a crib with fixed or permanent heads and sliding and recessed false heads, that are adjusted by means of right and left hand screw-bolts and traversing nuts, and of radially-adjustable cross-bars.

W. COUPE.

Machine for Boarding and Breaking Raw Hides.

No. 202,414. Patented April 16, 1878.

Fig. 1

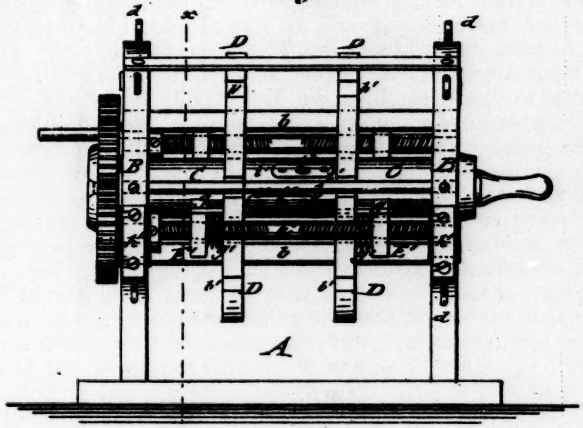

Fig. 2 No. 410 Royer v. Coupe et al. } p 297 Fig. 3

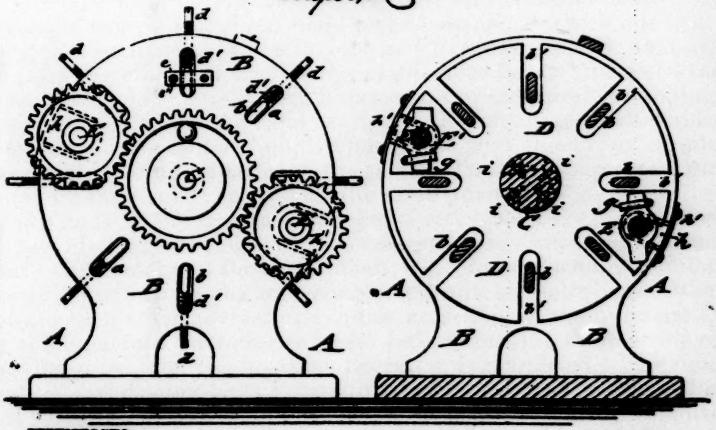

WITNESSES:

C. Neveux

C. Sedgwick

INVENTOR:

W. Coupe

BY. Munn & Co

ATTORNEYS.

It consists, further, of the combination of these hide-confining parts with a central revolving shaft, having concaved recesses at the middle portion, but at varying relative positions to the heads, and of spurred clamping-dogs, fitting the recesses and secured by fastening-screws.

Referring to the drawings, A represents a crib, that is made of stationary or fixed heads B, of disk shape, supported on suitable standards. The stationary heads are provided, at some distance from the centers of the upper disk-shaped portions, with short radial guide slots *a*, of which the slots of one head are closed, so as to form sockets, while the slots of the other are open, for removing or inserting the cross-bars *b*, that extend from head to head, being adjusted nearer to or farther from the center by radial set-screws *d*, and cushioned by spiral springs *d'*. The heads are stiffened at the top by connecting rods or bars of suitable strength to prevent any springing or spreading of the heads. The cross-bars *b* are retained, when inserted into the guide-slots and socket-recesses of the heads, by means of pivot-plates *e*, locking over buttons *e'*, so as to prevent the playing out of the cross-bars during the working of the machine.

The crib is provided with a center shaft, C, that revolves in center bearings of the permanent heads B, and is alternately turned by suitable gearing and reversing mechanism, first in one, then in opposite, direction. On the shaft C are arranged, between the stationary heads B, two false heads, D, that are provided with radial recesses *b'* for the cross-bars *b*, the recesses extending from the circumference toward the center.

The false heads D are laterally adjusted on the center shaft C by means of two right and left hand screw-bolts, E, of which one is arranged at each side of the crib, and by traversing nuts E', that are engaged by elbows or hook-bars *g* of the false heads. Between the false heads and the traversing nuts are interposed spiral cushioning-springs *g'*, by which the rigid bearing of the false heads on the hides mounted on the center shaft is diminished, and thereby a certain degree of yielding imparted to the same. The cross-bars are cushioned by their spiral springs for the same purpose.

The ends of the right and left hand screw-bolts E are connected at one side by gear-wheels with an intermeshing center crank-wheel, that turns loosely on the center shaft, so as to produce the simultaneous adjustment of the traversing screw-nuts and false heads either toward each other or from each other, according as the hides are to be confined into narrower compass before breaking them or for removing them after the breaking operation is completed. The right and left hand screw-bolts E turn in detachable journal-boxes *h*, that are set into recesses of the stationary heads, and firmly retained therein by pivoted and locking cross-straps *h'*, the boxes and screw-bolts being removed from the heads when the hides are applied to or taken off from the center shaft.

The hides are firmly clamped at one end to the middle por-
299 tion of the shaft C by means of detachable dogs or clamp-sections *i*, that fit into concaved recesses of the shaft and hold the hides firmly by means of spurs i^1 and clamp-screws i^2. The re-

cesses are not all placed around the center portion of the shaft, but so that one recess is nearer to one of the stationary heads, the other nearer to the opposite one, and so on alternately, so as not to weaken the shaft at the middle portion, give a better hold for the clamping-screws and distribute the hides over the entire lateral surface of the middle portion of the shaft. When the hides are thus attached to and wound on the shaft the false heads are moved up, so as to confine the hides laterally to the required degree, and then the cross-bars inserted into the stationary and false heads. The pressure of the gradually-tightened cross-bars and of the false heads produces the tight lapping of the hides around the shaft. The machine is then set in motion—first in one, then in reverse direction—and thereby the hides broken or boarded in uniform manner all through. The even distribution of the hides around the shaft by the clamping-dogs, in connection with the yielding action of the false heads and cross-bars, requires less power for working the machine than where the hides are all attached to and bulging at one point of the shaft, and broken up by a rigid crib or cage.

Having thus described my invention, I claim as new and desire to secure by letters patent—

1. A machine for boarding or breaking raw hides, consisting of stationary outer heads, with radially-adjustable connecting cross-bars, inner adjustable and spring-cushioned false heads, and a central revolving shaft, with clamping devices for attaching the hides, substantially as and for the purpose set forth.

2. The combination, with the revolving center shaft and stationary outer heads, having radially adjustable cross-bars, of recessed and spring-cushioned false heads, adjusted simultaneously by right and left hand screw-bolts and traversing-nuts, substantially as specified.

3. The combination of the stationary outer heads, having detachable journal-boxes and retaining devices, and of the adjustable inner false heads, having hook arms, with right and left hand screw-bolts and traversing screw-nuts, to allow removing and replacing of bolts and nuts for attaching or detaching hides, substantially as set forth.

4. The combination of the central revolving shaft, having concaved recesses in the middle portion, said recesses being placed alternately nearer to one or to the opposite head, with clamping dogs or sections, having retaining-spurs and fastening-screws, substantially as shown and described.

WILLIAM COUPE.

Witnesses:
PAUL GOEPEL.
C. SEDGWICK.

(No Model.)

300

W. COUPE.

Machine for Boarding and Breaking Raw Hides.

No. 241,308. **Patented May 10, 1881.**

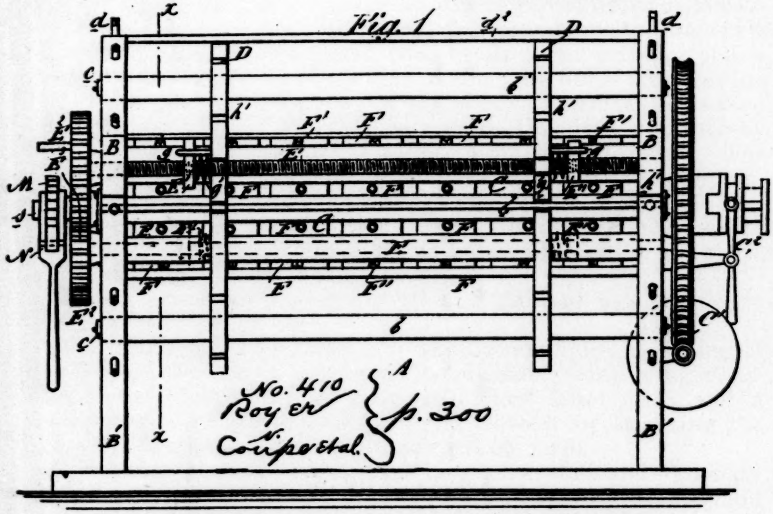

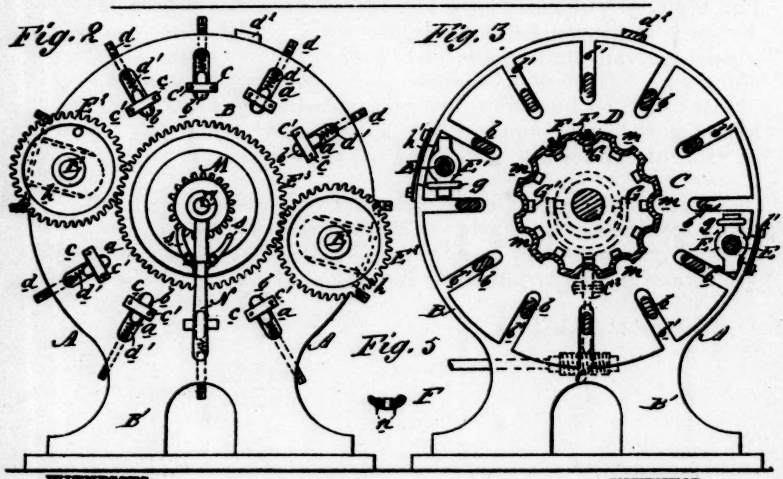

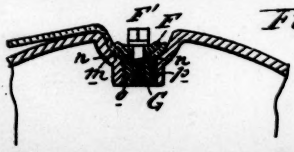

WITNESSES:

C. Newell

C. Sedgwick

INVENTOR:

W. Coupe

BY Munn & Co

ATTORNEYS.

301 UNITED STATES PATENT OFFICE.

WILLIAM COUPE, of South Attleborough, Massachusetts.

Machine for Boarding and Breaking Raw Hides.

Specification forming part of Letters Patent No. 241,308, dated May 10, 1881; application filed March 31, 1881. (No model.)

To all whom it may concern:

Be it known that I, William Coupe, of South Attleborough, in the county of Bristol and State of Massachusetts, have invented a new and useful improvement in machines for boarding and breaking raw hides, of which the following is a specification.

This invention is designed as an improvement on the machine for boarding and breaking raw hides for which patent No. 202,414 was issued to me April 16, 1878; and its object is to increase the effectiveness of the machine.

In the machine above alluded to short concave recesses were formed about the center portion of the drum, in which the hides were clamped by one end, a single clamp serving for each hide; hence the hides did not spread evenly, the strain upon them was all at one point, and the breaking was not so effective as might be.

This invention consists of a hide-securing drum having parallel grooves or recesses extending throughout its length; and it consists, further, in inserting steel bushings in the bottom of said grooves or recesses, to form more durable sockets for the clamp-screws.

Figure 1 is a side elevation of my improved machine with parts removed to exhibit other parts. Fig. 2 is an end view of the same. Fig. 3 is a sectional end elevation on line *x x*, Fig. 1. Fig. 4 is an enlarged sectional elevation of a portion of the hide-securing drum, showing a bushing, clamp, and clamp-screw in position. Fig. 5 is a side elevation of a clamp.

Similar letters of reference indicate corresponding parts.

(Here follows diagram marked p. 300.)

In the accompanying drawings, A represents a crib, that is made of stationary or fixed heads B, of disk shape, supported on suitable standards, B′. These stationary heads B are provided at some distance from their centers with short radial guide-slots *a*, of which the slots of one head are closed, so as to form sockets, while the slots of the other are open for removing or inserting the cross-bars *b*, that extend from head to head, said bars *b* being adjusted nearer to or farther from the centers of the disks B by radial set-screws *d*, and cushioned by spiral springs *d′*. The heads B are stiffened at the top by connecting rods or bars d^2, of suitable strength to prevent any springing or spreading of said heads B. The cross-bars *b* are retained, when inserted in the guide-slots and socket-recesses *a*, by means of pivot-plates *c*, locking over buttons *c′*, so as to prevent

the working out of said cross-bars *b* during the operation of the machine.

The crib is provided with a center drum, C, that revolves in center bearings of the permanent heads B, and is alternately turned by suitable gearing and reversing mechanism, first in one and then in opposite direction, a worm and wheel, C′, being preferably the mechanism for transmitting motion to the said drum C, and an ordinary clutch mechanism, C^2, being designed to throw the said drum C in and out of gear with said mechanism C′.

On the drum C are arranged, between the stationary heads B, two false heads, D, that are provided with radial recesses *b*′, for the cross-bars *b*, said recesses *b*′ extending from the circumference toward the center of said heads D. These false heads D are laterally adjusted on the drum C by means of two right and left hand screw-rods, E, of which one is arranged on each side of the crib, and by traversing nuts E′, that are engaged by elbows or hook-bars *g* of the false heads D. Between the false heads D and traversing nuts E′ are interposed spiral cushioning-springs *g*′, by which the rigid bearing of said false heads D on the hides secured in the center drum, C, is diminished, and thereby a certain degree of yielding imparted to said heads D. The cross-bars *b* are cushioned by their spiral springs *d*′ for the same purpose.

The ends of the screw-rods E are connected at one side by gear-wheels E^2 with an intermeshing center crank-wheel E^3, that turns loosely on the center shaft, C, so as to produce the simultaneous adjustment of the traversing screw-nuts E′ and false heads D either toward or from each other, according as the hides are to be confined within narrower compass before breaking them or for removing them after the breaking operation is completed. The screw-rods E turn in detachable journal boxes *h*, that are set into recesses of the stationary heads B, and are firmly retained therein by pivoted and locking cross-straps *h*′, the boxes *h* and screw-rods E being removed from the heads B when the hides are put on or taken from the center drum, C.

302 The hides are firmly clamped at one end, along the whole extent or margin thereof, in the longitudinal recesses *m* of the drum C, by means of detachable dogs or clamps F, that fit into the concave recesses *m* of said drum C, and hold the hides firmly by means of their spurs *n* and screws F′, which latter pass centrally through said clamps F and the hides into the steel bushings G, that are held in corresponding sockets *o* in the drum C by side pins, *p*. By this arrangement the hides are spread over the entire lateral surface of the drum C, between the false heads D. This drum C is preferably hollow and of cast-iron, with a wrought-iron or steel shaft to insure sufficient resistance against the operating strain brought upon it. In machines of ordinary size this drum C is about seven feet long, and seven six-inch dogs or clamps, F, are applied in each recess *m*, there being preferably twelve recesses, *m*, in a drum, C, of sixteen inches in diameter. When the hides are thus attached to and wound on the drum C the false heads D are moved up so as to confine the said hides laterally to the required degree, and then

the cross-bars *b* are inserted into the stationary and false heads B D. The pressure of the gradually-tightened cross-bars *b* and false heads D produces the tight lapping of the hides around the drum C as the latter is revolved. The drum C being set in motion, first in one and then in reverse direction, the hides are broken or boarded in uniform manner all through. The even distribution of the hides along and around the drum C, because of the long grooves or recesses *m*, causes said hides to be broken more thoroughly and evenly than is done in other machines where their points of attachment are more circumscribed.

A special advantage of the bushings C is that they last in good condition for a long time, and when worn can readily be replaced, thus making the drum C more durable.

On one end of the drum C a ratchet, M, and lever and dogs N *s*, respectively, may be placed, whereby said drum C may be slightly turned in either direction, if necessary, for the more convenient attachment of the hides.

In order to facilitate the softening of the hides or leather and keep up a uniform temperature in the crib, it is designed to admit into the hollow part of the drum a jet of steam through a small hole drilled into the center of the drum-shaft, also a corresponding hole on the other end of the shaft to allow the condensed steam to escape.

Having thus fully described my invention, I claim as new and desire to secure by letters patent—

1. In a machine for boarding and breaking hides, the drum C, having parallel recesses *m* extending its whole length, substantially as herein shown and described, whereby the hides may be secured at several points and spread over the entire lateral surface of the drum, as set forth.

2. In a machine for boarding and breaking hides, the combination, with the longitudinally-recessed drum C, provided with sockets *o*, of the bushings G, substantially as herein shown and described, whereby the clamping-screws are held, as set forth, and the durability of the drum increased.

3. In a machine for boarding and breaking hides, the combination, with the recessed drum C, of the adjustable ratchet, lever, and dogs M N *s*, substantially as and for the purpose described.

WILLIAM COUPE.

Witnesses:

WILLIAM P. SHAW.
CHARLES W. SHAW.

303 UNITED STATES PATENT OFFICE.

WILLIAM COUPE, of South Attleborough, Massachusetts.

Improvement in Processes for the Manufacture of Rawhide.

Specification forming part of Letters Patent No. 182,106, dated September 12, 1876; application filed July 11, 1876.

To all whom it may concern:

Be it known that I, William Coupe, of South Attleborough, in the county of Bristol and State of Massachusetts, have invented a new and improved process for the manufacture of rawhide leather, of which the following is a specification:

This invention relates to that class of processes employed for treating rawhides, to soften and preserve them; and it consists of subjecting the hides to several baths having different properties, and to manipulations, hereinafter more fully described.

If the hides to be treated are dry, they are placed in a vat of soft water, where they are allowed to remain until they are well soaked. They are then taken out and well mulled or softened and washed. They are then put into a weak solution of lime, and handled on alternate days until the hair begins to slip. When they are taken out the hair is removed, and they are well scudded and washed, and are placed in a vat of clean water to soak. After soaking, they are taken out and trimmed and shaved on the flesh side. At the same time they are cut down on the butts and necks, to make them uniform in thickness, and to save the glue-stock.

My object in using lime to remove the hair is, that it is safer, and cleanses and purifies the hide better than any other known agent, and enables me to produce a superior article of stock. The hides are now transferred to what I call the "drench," for the purpose of removing all the impurities from the hide, such as "scud," lime, and all other foreign matter that hides are likely to collect, and without the removal of which it is impossible to make a perfect article.

The drench is composed of one hundred pounds of dried blood, six pounds of ammonia, and four hundred gallons of water, and is raised to a blood-heat. The hides are allowed to remain in the drench for about two hours, or long enough to kill the lime, which will not exceed three hours. They are then removed from the drench and well worked on both sides, and are then placed in what I shall call a "sour," which consists of six pounds of sulphuric acid diluted with four hundred gallons of water. This quantity is sufficient for fourteen hundred pounds of hides.

The sour bleaches and purifies the hides after coming from the drench. When removed from the sour they are well washed, and placed in a bath, consisting of a solution of carbolic acid in water, in the proportion of two pounds of crystals of carbolic acid to four hundred gallons of water. This prevents all further decomposition.

After the hides have been agitated in this bath for about two hours, they may be taken out and dried. When they are about nine-tenths dry they are taken down and softened. If it is not convenient to soften them at this time they may be left to dry out entirely; but it is recommended that the softening be done at this stage of the process, as it saves considerable labor. The softening is effected as follows: When the hides are nearly dry I give them a light coating of "slush," consisting of tallow, sixteen parts; paraffine, two and one-half parts; bees-wax, one and one-half part. The ingredients are united while melted, and the slush applied to the hides while warm. The tallow keeps the hides pliable, the paraffine penetrates the hide quickly, and softens it, and also prevents vermin attacking it, and the bees-wax gives the leather a firm body, which it would not have without it. After the application of the slush I put the hides through a machine for stretching the fiber. After the fiber is stretched, as above described, the hide becomes somewhat soft; I then apply another coating of slush, and put them into a drum, which is air-tight, and provided with tubular shafts. The drum is about twelve feet in diameter, and four feet wide, having internally-projecting pins about six inches in length and two inches in diameter. A current of warm air is forced into the drum through one of the journals, and passes out through the other, so that the temperature inside the drum is under the control of the operator. This is a vital point in producing a good article of stock. On revolving the drum and passing the current of warm air through it, the hides, by constant contact with the pins inside the drum, soon become soft and pliable. After the hides have been treated in the drum for three hours, they are taken out and put on an ordinary "setting-machine," and set out. After setting, they may be shaved and coated lightly with lard-oil.

304

I am aware that it is not new to employ carbolic acid with alum or ammonia with blood for making bating compounds for hides and skins.

The ammonia which I employ is the common carbonate manufactured by chemists for the trade, and of the usual strength.

Having thus described my invention, I claim as new and desire to secure by letters patent—

The improved process described, of submitting the hides or skins from which the hair has been removed to a succession of baths, composed of the solution and in the order set forth, and, when partially dry, coating them with a mixture of tallow, bees-wax, and paraffine, and then submitting them to the action of a revolving drum or other suitable softening apparatus, all substantially as stated, for the purpose described.

WM. COUPE.

Witnesses:
WILLIAM P. SHAW.
HENRY H. CLARK.

306 UNITED STATES PATENT OFFICE.

HERMAN ROYER and LOUIS ROYER, of San Francisco, California.

Letters Patent No. 77920, dated May 12, 1868.

Improved Machine for Treating Hides.

The schedule referred to in these letters patent and making part of the same.

To all whom it may concern:

Be it known that we, Herman Royer and Louis Royer, of San Francisco city, San Francisco county, State of California, have invented a new and improved machine for converting raw hides into leather; and we do hereby declare the following description and accompanying drawings are sufficient to enable any person skilled in the art or science to which it most nearly appertains to make and use our said invention or improvements without further invention or experiment.

The nature of our invention is to provide an improved machine for converting raw hides into leather, of that class which is used for belting, lacings, and other purposes where it is necessary to preserve the native strength and toughness without destroying or impairing the natural fibres or grain of the leather.

In order to accomplish our object, we employ a machine mounted on a suitable frame, having a vertical slotted shaft, to which is attached, at its base, a bevelled wheel between two bevelled pinions upon a horizontal shaft. Around the vertical shaft is placed a row of vertical pins or rollers, held in place by upper and lower rings, one of which is firmly bolted to the frame.

An iron weight or press is employed for crowding the coil of hide down after it has received the forward and back action around the shaft.

To more fully illustrate and describe our invention, reference is had to the accompanying drawings, of which—

(Here follows diagram marked p. 305.)

Figure 1 is a horizontal section through A B.

Figure 2, a side sectional elevation, showing central shaft.

Figure 3, a side sectional elevation.

Figure 4, a horizontal section, showing the hide around the shaft in the circle of pins.

A represents the frame, of any suitable materials, up through which the vertical shaft B passes, having a slot, B′, through which the end of the hide is placed, where it is held in place by the set-screws *b b b b*.

C C C are vertical pins or rollers set in the rings D and D′, the lower one, or D′, being firmly attached to the frame by bolts *c c*.

H & L. Royer,

Preparing Hides.

No. 77,920. Patented May 12, 1868.

Fig 1.

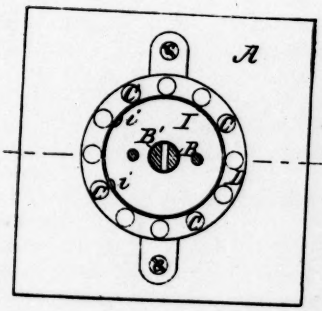

Fig 2.

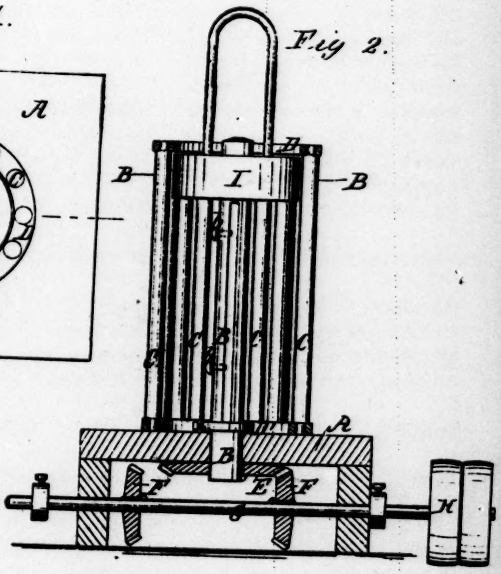

Fig: 3.

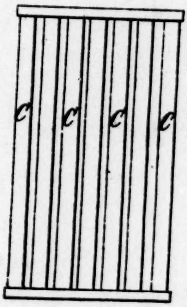

Fig. 4.

Witnesses;
Jno L Boone
Geo N Strong

No. 410
Royer
v.
Coupe
& Co
p. 305

Inventors;
Herman Royer
Louis Royer
Per Dewey & Co
Attys

A bevelled wheel, E, is attached to the vertical shaft B, which is actuated by the bevelled pinions F F placed on the horizontal driving-shaft G. This shaft has a pulley, H, for driving the machine.

An iron weight, I, having an opening through its centre for the vertical shaft, and vertical grooves, *i i*, in it to prevent its turning, is placed upon the inside of the pins or rollers, and, by pressing upon this weight, the hide is compressed edgewise, after the forward and backward stretching or pressing is performed lengthwise.

The operation of our machine is as follows: The end of the raw hide, after it has been deprived of the hair, is introduced into the slot B′, and the set-crews *b b b* turned against it, when motion is imparted to the machine, and the hide is wound tightly around the vertical shaft. When this is accomplished, and sufficient time has elapsed, the shaft is slowly reversed by throwing the other pinion into gear, when the hide commences to uncoil, or doubling back from the shaft, which with the folding back, and pressing against the pins or rollers, produces the desired result of stretching in one way, compressing, corrugating, or roughing in the opposite direction, when the weight I is placed upon the top of the hide, and is pressed downward, which, in a measure, compensates for the stretching lengthwise.

The hide so operated upon is then treated with oil and tallow in the usual way.

By thus treating the hide in our machine, the leather is rendered very tough, and the fibres or grain are not injured, but imparts to it a rough, corrugated, and seamy appearance, making it more strong and lasting for the purposes designed than by any other machine or process.

Having thus described our invention, what we claim, and desire to secure by letters patent, is—

1. The vertical shaft B with a slot B′, and set-screws, *b b b*, said shaft having a forward and back motion, substantially as and for the purpose described.

2. The pins or rollers C C C set in the rings D and D′, together with the grooved weight I, substantially as and for the purposes described.

In witness whereof we have hereunto set our hands and seals.

HERMAN ROYER. [L. S.]
LOUIS ROYER. [L. S.]

Witnesses:

C. W. M. SMITH.
GEO. H. STRONG.

308 UNITED STATES PATENT OFFICE.

HERMAN ROYER, of San Francisco, California.

Letters Patent No. 91772, dated June 22, 1869.

Improved Device for Treating Hides.

The schedule referred to in these letters patent and making part of the same.

To all whom it may concern:

Be it known that I, Herman Royer, of the city and county of San Francisco, and State of California, have invented an improved machine for treating raw hides; and I do hereby declare the following description and accompanying drawings are sufficient to enable any person skilled in the art or science to which it most nearly appertains, to make and use my said invention or improvement without further invention or experiment.

My invention relates to an improved machine for converting raw hides, in their dry and rough state, into leather, suitable for belts, lacings, and other purposes, and is an improvement on a patent issued to myself and Louis Royer, for a machine for a similar purpose, said patent being dated May 12, 1868.

This improvement consists in constructing the machine so that the hide, when properly secured in it, may be twisted each way, back and forth, until it becomes soft and pliable, thus rendering it capable of being used for many purposes without in any manner injuring the texture of the leather.

To more fully illustrate and explain my invention, reference is had to the accompanying drawing, forming a part of this specification, which represents a side view of the machine.

Similar letters of reference in the figure indicate like parts.

(Here follows diagram marked p. 307.)

A is the lower portion or foundation of the machine, and B, the upper portion, the two being of wood, and of the same size, and joined together by the vertical posts C C.

Upon the top of the upper portion, B, is a horizontal shaft, D, bearing at each end in boxes on the blocks E E. This shaft carries the two independent bevel-pinions or drivers F F′.

The bevelled wheel G is attached to the vertical shaft I, which passes through the upper portion of the frame B, and has a slot, *a*, in its end.

A cylinder, J, surrounds the shaft I, and is arranged to revolve with and slide back and forth on the shaft; and its ends are formed into couplings, which engage with reverse couplings on the pinions, as it is moved from side to side.

In the middle of the cylinder J is a groove, *e*, into which a lug, *d*,

H. Royer,

Tanning Apparatus.

No. 91,772. Patented June 22. 1869.

307

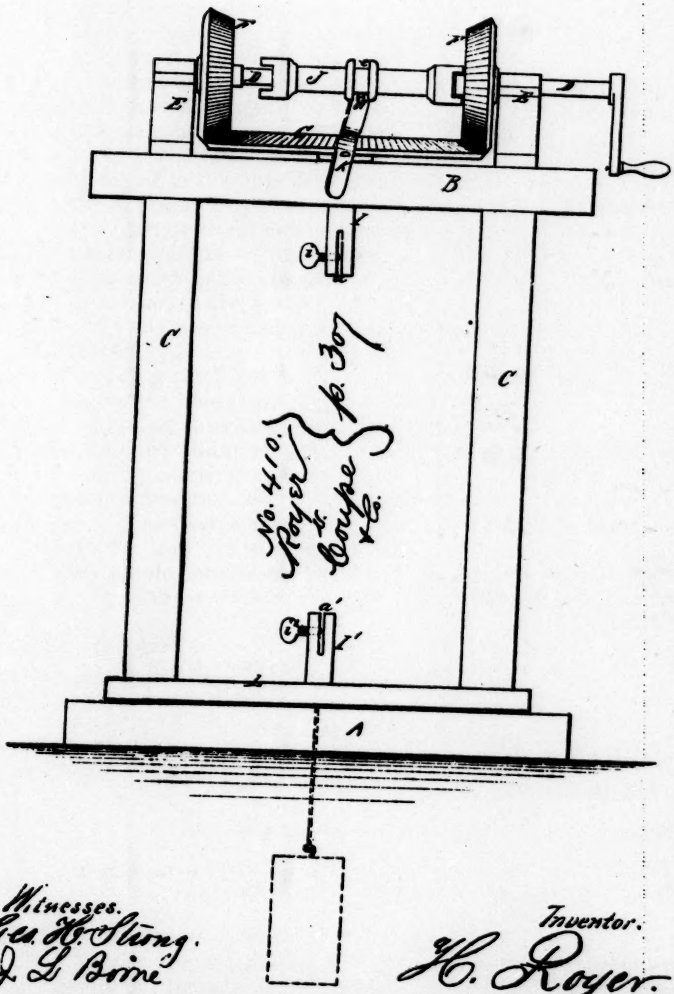

Witnesses.
Geo. H. Strong.
J. L. Byrne

Inventor.
H. Royer.

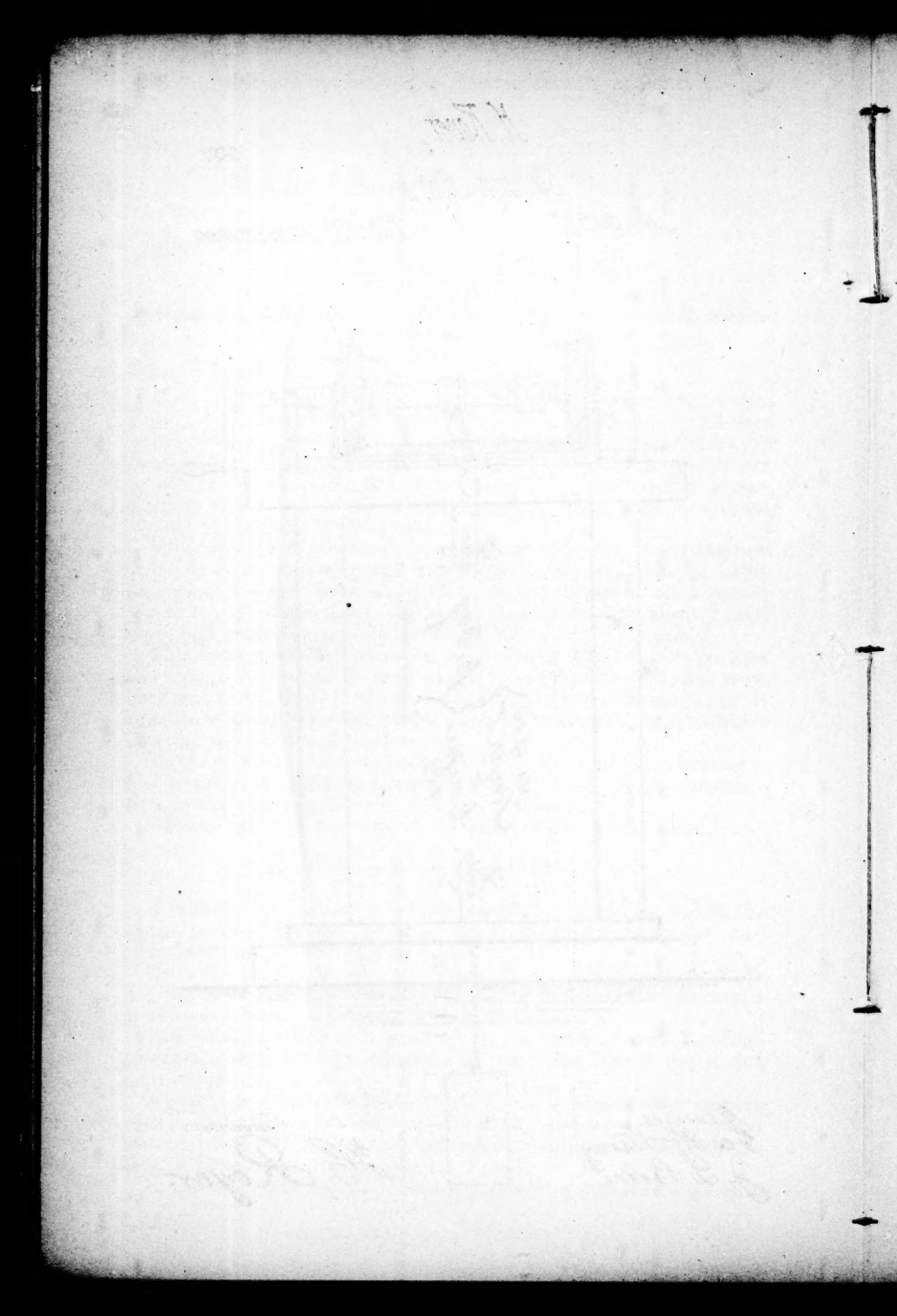

on the end of the lever K, projects, so that, by moving the lever from side to side, the cylinder is caused to couple with the pinions alternately, thus carrying the follower in an opposite direction each time the cylinder is shifted.

A strong bar, L, moves loosely up and down the vertical posts C C, being guided by holes in each end of the bar. From the middle of this bar the shaft I′ rises, and is provided with a slot, *a′*, in its end.

The hide to be treated, after it has been deprived of its hair, is secured at each end in the slots *a* and *a′* of the vertical shafts I I′, by set-screws, *i i′*, and the cylinder J is caused to engage with one of the pinions, and the shaft is set in motion, which causes the hide to be twisted between the two shafts.

A weight is hung below the bar L, which keeps the hide drawn taut as it is twisted, the bar L moving up the vertical posts as the hide is contracted in length.

After the hide has been twisted in one direction, the coupling is changed to the opposite pinion, which causes the shaft I to turn in the opposite direction, unwinding the hide, and again twisting it, and that, without changing the direction of revolution of the horizontal shaft D. This winding and unwinding is continued until the hide has become flexible and soft, after which it is treated with oil or tallow, in the usual way.

By the use of this machine, I am enabled to give the raw hides a twisting motion in either direction alternately, thus thoroughly breaking the fibre, and forming a soft and flexible substance, the operation being quickly performed.

Having thus described my invention,

What I claim as new, and desire to secure by letters patent, is—

1. Converting raw hides into leather, by twisting them spirally in either direction alternately, substantially as described.

2. The device, consisting of a reversing-apparatus, the reversible shaft I, and the weighted sliding bar L, with the stationary shaft I′, the whole constructed substantially as herein described.

In witness whereof I have hereunto set my hand and seal.

H. ROYER. [L. S.]

Witnesses:
WILLIAM STANIFORTH.
J. L. BOONE.

309 UNITED STATES PATENT OFFICE.

JOHN A. J. SHULTZ, of St. Louis, Missouri.

Improvement in Manufacturing Fulled Rawhide.

Specification forming part of Letters Patent No. 187,492, dated February 20, 1877; application filed July 11, 1876.

To all whom it may concern:

Be it known that I, John A. J. Shultz, a resident of St. Louis, State of Missouri, have invented a new and useful improvement in

the method of manufacturing fulled leather, of which the following is a full, clear, and exact description.

The present invention is an improvement in the method of manufacturing what I term fulled leather.

I first soak the hides in clear water, as usual. They are then soaked in lime-water and unhaired. They are then bated, and, if the product is intended for lacing, very thoroughly, but if intended for belting they are bated but little, and, preferably, in cold water. I then, preferably, dip the hides in a weak solution of alum and sulphuric acid, (which aids in more thoroughly neutralizing the lime and foreign substances that may be present,) after which the hides are hung up and thoroughly dried. They are then fulled and stuffed, and, preferably, with tallow and tar, when they are ready for use. The fulling is, preferably, done in a special machine designed for the purpose, and described in letters patent No. 177,576, granted me May 16, 1876. The dried greased hides are worked in the machine until the fiber of the hide is thoroughly broken, and the hides made soft and pliable.

Several important advantages accrue from the above-described method. By using lime to remove the hair the weight of the hide is not reduced as it is when the hair is removed by sweating. The product, therefore, is comparatively heavier, and more durable than that from sweated hides. An effect, also, of the liming is to distend the hide, and from having been once distended the fulling and stuffing can afterward be accomplished more readily and effectually. Further, that loss arising from the frequent spoiling of the hides during the sweating process is obviated. The product, finally, is more in substance like ordinary tanned leather. The process pursued, however, is, on the other hand, materially unlike ordinary tanning. After liming, the hides in the present process are thoroughly dried, as otherwise it would be impracti-ble to full them, as above described, and the fulling and stuffing of the present improvement are substantially in lieu of the tanning in making ordinary leather. Compared, therefore, with the latter the present process is much cheaper, and its product is much stronger.

What I claim is—

The improved process in preparing fulled rawhide, consisting of liming, bating, and drying the hides, and then fulling and stuffing them, all as set forth.

JOHN A. J. SHULTZ.

Witnesses:
CHAS. D. MOODY.
W. H. ARENDT.

310 UNITED STATES PATENT OFFICE.

C. H. BRAND, of Williamsburg, New York.

Improvement in Manufacture of Velluted Cloth.

Specification forming part of Letters Patent No. 5534, dated April 25, 1848.

To all whom it may concern:

Be it known that I, C. H. Brand, of Williamsburg, on Long Island, in the State of New York, have invented a new and improved composition and process for manufacturing a chemical velluted cloth; and I do hereby declare that the following is a full and exact description of this my invention and the manufacturing of the same.

I take muslin, linen, or any cloth made of cotton or linen, fasten it with cords on frames. Then I take a smooth piece of pumice-stone and rub the same off with it. When this is done I apply to it, by a couple of large round knives or brushes made for this purpose, a composition made as follows: I take four gallons of linseed-oil, in which a quarter of a pound of india-rubber has been dissolved, which is done by putting it for about three hours on a strong coal-fire. Then I add one-fourth pound of bees-wax, boil it again half an hour. After this I add one-fourth pound of gum-elemi and boil it one-fourth of an hour. Then I add one pound of asphalt, boil it again for about half an hour, and then at last I add two pounds of fine lamp-black, mix it well together, and boil this again for about half an hour. This mass, when cold, is then applied as described above. When I have given the cloth a coat of the above-described mass I put it into the sun or into a warm place to dry. When dry I take water, put it on the cloth, and then I take a piece of a pumice-stone and rub it off with the water, dry it again and give it another coat, as before, and treat it in the same manner. If this is done, I apply to it a coat of the following composition, very thin and even: I take one pound of gum-copal, melt it in a suitable vessel, add to it one pound of linseed-oil in which one ounce of india-rubber has been dissolved. Then I take half a pound of japan and one pound of spirits of turpentine, add it, and let it get cold for use. If this mass is applied as above said, I take ground flock, throw it all over the cloth, and beat it from the under side with a couple of sticks till the flock has settled. Then it is dried and rubbed of with pumice-stone. The other side is done in the same way as the first. The prints are velluted in like manner as the cloth.

What I claim as my invention, and desire to secure by letters patent, is—

The composition of the above-named articles by which the ground flock is applied to the cloth.

C. H. BRAND.

Witnesses:
A. MENSING.
W. ZERSE.

311 UNITED STATES PATENT OFFICE.

JOHN ROSE, of Newark, New Jersey.

Improvement in Compositions for Stuffing Leather.

Specification forming part of Letters Patent No. 14832, dated May 6, 1856.

To all whom it may concern:

Be it known that I, John Rose, of the city of Newark, county of Essex, and State of New Jersey, have discovered a new and useful compound for the softening of all kinds of leather; and I do declare the following to be a full and exact description thereof.

The nature of the discovery consists in an application to the leather of a compound of such a softening quality and so congenial to leather as to entirely dispense with the necessity of using the pin-block or any other harsh mode now used to render tanned or curried leather pliable. It also, from the small proportion of fatty matter, fits the leather much better than any other composition now known or used for a high finish, tending to preserve the enamel instead of causing it to crack or come off. It also renders the leather more durable.

To enable others skilled in the art to make and use my new composition, I proceed to state the ingredients, the proportion of each, and the manner of compounding and using the same.

The ingredients I use are rye-meal, beeswax, rosin, molasses, and cod-oil. The proportions are two pounds rye-meal, one pound beeswax, one pound rosin, two gallons of molasses, one gallon cod-oil.

The mode of compounding is to make a stiff paste with water of the rye-meal, then dissolve the wax and rosin together, and mix in the rye-paste. When well mixed add thereto the molasses and the cod-oil, stirring them well together. Then, letting it become perfectly cool, it is ready for use.

The manner of use is that commonly known by the term "stuffing."

Being well aware that other meal than rye and other oil or fatty matter than cod, if commingled with the wax, rosin, and molasses, can be used, and would produce nearly the same effects, I therefore do not claim the rye-meal nor the cod-oil exclusively, nor the precise proportions specified.

What I do claim as my discovery, and desire to secure by letters patent, is—

Softening leather by stuffing it with a compound made of paste made of rye or other meal, beeswax, rosin, molasses, and oil or other fatty matter, in the proportions as specified.

JOHN ROSE.

Witnesses:
W. M. GOODING.
STEPHEN CLARKE.

312 UNITED STATES PATENT OFFICE.

A. TAW, of Philadelphia, Pennsylvania.

Improved Composition for Treating Leather.

Specification forming part of Letters Patent No. 44025, dated August 30, 1864.

To all whom it may concern:

Be it known that I, A. Taw, of Philadelphia, in the county of Philadelphia and State of Pennsylvania, have invented a new and improved composition for treating leather; and I do hereby declare that the following is a full, clear, and exact description thereof, which will enable any person skilled in the art to make and use the same.

This invention consists in a composition of the product obtained by the distillation of a mixture of the residuum of petroleum or coal-tar and tallow with animal fat—such as tallow, horse-fat, neat's-foot oil, and fish-oil—to which a small percentage of beeswax is added. The proportions in which I mix these ingredients together are about as follows:

	Parts.
Tallow	40
Horse-fat	7½
Beeswax	2½
Neat's-foot oil	10
Product of distillation of the residuum of petroleum or coal-tar mixed with from five to twenty per cent. of tallow	30
Fish-oil	10
	100

The residuum of petroleum is generally considered of very little or no value, and by subjecting this residuum, mixed with more or less tallow, to distillation I obtain a product which, when properly mixed with animal fat, produces a superior "dubbing."

In preparing my composition I first melt the tallow, horse-fat, and beeswax (if such is used) in a kettle, and in another kettle I place the product of distillation of the residuum of petroleum or coal-tar mixed with tallow. When limpid I mix it with the melted fats, and the oils, which have been previously mixed together, are added, and the whole is well stirred together while hot. After the mixture is cold it is ready for use, and it is applied to the leather in the usual manner. It forms a cheap and very effective substitute for the ordinary dubbing, and by increasing the percentage of the product of redistillation of the residuum of petroleum or coal-tar and tallow the mixture is rendered applicable for curriers' use.

I am aware that petroleum residuum has before been employed in the manufacture of dubbing.

What I claim as new, and desire to secure by letters patent, is—

A composition made by mixing tallow, horse-fat, neat's-foot oil, fish-oil, and beeswax with the product obtained by the distillation of a mixture of animal fat and the residuum of petroleum or coal-tar, in the manner and in about the proportions herein specified.

ABRAHAM TAW.

Witnesses:

JOHN DAINTY.

JOSEPH BROBSTON.

313 UNITED STATES PATENT OFFICE.

MOSES W. PAGE, of Franklin, New Hampshire.

Improvement in the Preparation of Leather.

Specification forming part of Letters Patent No. 54587, dated May 8, 1866.

To all whom it may concern:

Be it known that I, Moses W. Page, of Franklin, in the county of Merrimack and State of New Hampshire, have invented certain improvements in the preparation of leather; and I hereby declare the following to be a full, clear, and exact description thereof.

In the ordinary process of currying leather, after the usual skiving operation has been performed, the leather has been shaved off, chiefly on the flesh side of the butt, in order to reduce it to the uniform thickness required. As, however, the flesh side of the leather is much stronger than the grain side, the quality of the stock is thereby depreciated, and for the purposes of lacing, picker, or harness straps for looms, and where very thin and narrow machine-belting is required, this process of currying is particularly objectionable on account of the leather being weakened.

My invention consists in buffing or shaving chiefly the grain side instead of shaving the flesh side of the butt of the leather, whereby it may be brought more nearly to a uniform thickness without impairing its strength, and requiring but little leveling on the flesh side, while its softness and pliability are very much increased.

To enable others skilled in the art to understand and use my invention, I will proceed to describe the manner in which I have carried it out.

The leather to be curried, after having been properly tanned, is skived in a well-known manner, when it is buffed or shaved very lightly entirely over the grain side, and then the butt or thick part is shaved nearly through the grain by taking off several more cuts or clips, so as to reduce its thickness very considerably, by which means the leather is brought more nearly to a uniform thickness, thereby requiring but little leveling or shaving on the flesh side of the butt.

While the operations of skiving and buffing are proceeding great care should be taken that the stock does not dry, thus avoiding the

use of water, which, if applied before the oil or stuffing, would occasion considerable damage to the leather.

The leather is now ready for the stuffing, which is composed of the following ingredients in about the following proportions, viz: Eight pounds of tallow; eight quarts of cooked cod-liver oil, (rejected medicine oil;) eight quarts refined petroleum, such as is used by curriers; four quarts neat's-foot oil, mixed and applied as usual. The leather should now be dried in the shade and packed down for a few days, when it is pin-blocked, boarded, or otherwise softened, as most convenient, and glassed sufficiently to give it a smooth and finished appearance.

Wax-leather, calf-skins, and leather for harness and heavy belting should be buffed very lightly over the grain, and the wax-leather and calf-skins are blacked in the following manner: Soap-blacking, after being made about a month, is used in small quantities, and the stock being well cleaned is left to dry for fifteen or twenty minutes, when the cooked cod-liver is applied, and after the oil has struck in or out of sight the leather is immediately glassed, giving it the appearance of a French finish.

The leather used for harness is blacked in the ordinary way.

By buffing the leather to be used for lacing, &c., in the manner and on the grain side, as above described, the hardness of the grain is removed and the butt or thick portion reduced to a uniform thickness with the remaining portion without impairing the strength of the leather.

In the preparation of the above-described stuffing I find the cooked cod-liver oil to be a valuable ingredient, as it renders the leather exceedingly soft and pliable, which, on this account, is especially adapted for lacing, picker, or harness straps for looms and for thin and narrow machine-belting, while it answers well for all other descriptions of leather in common use, such cooked oil containing less sediment, and being therefore less liable to gum up or fry out of the leather than the oil now in general use, and preventing the leather from becoming hard and husky when worn.

What I claim as my invention, and desire to secure by letters patent, is—

Buffing the grain side instead of shaving the flesh side of the butt or thick portion of the leather, substantially as and for the purpose set forth.

MOSES W. PAGE.

Witnesses:

P. E. TESCHEMACHER.
N. W. STEARNS.

314 UNITED STATES PATENT OFFICE.

THOMAS MCDONALD, of Roxbury, Massachusetts.

Improvement in Stuffing and Currying Leather.

Specification forming part of Letters Patent No. 57165, dated August 14, 1866.

To all whom it may concern:

Be it known that I, Thomas McDonald, of Roxbury, in the county of Norfolk and State of Massachusetts, have made a new and useful invention having reference to the currying of leather; and I do hereby declare the same to be fully described as follows:

My invention is more properly a new composition or stuffing to be used in currying leather; and for the reception of the composition I first buff and color the leather rather than first apply the stuffing to it, and afterward buff and color it as by the ordinary process of currying.

The principle of my invention consists in the employment of a solution of caoutchouc with the oleaginous or fatty matter used in stuffing the leather, and I combine with the solution of caoutchouc a quantity of bees-wax or resin, or some of both.

In making the stuffing I take three ounces of india-rubber or caoutchouc, one ounce of resin, one-quarter of an ounce of bees-wax, ten pounds of oil, (fish-oil or neat's-foot oil, for instance,) and eleven pounds of tallow. The whole is to be melted and stirred together. The caoutchouc solution may be made by dissolving caoutchouc in benzine or other proper solvent.

I do not confine the composition to the precise proportions of the ingredients as above specified, as they may be varied somewhat, as circumstances may require, to suit the different qualities and kinds of leather to which the stuffing may be applicable.

I employ the caoutchouc with the oil and tallow for rendering the leather more resistive of water, as well as more pliable and tough. I make use of the bees-wax and resin for their drying qualities and for imparting solidity to the leather.

By my process of treating the buff-leather—that is, by buffing with a slicker and coloring it before the application of stuffing to it—I am enabled to effect the operations of buffing and coloring to much better advantage than I can with the stuffing in the leather, for preparatory to the operations the leather is in a damp state and favorable for being worked; but if the stuffing be put into it before it is buffed with the slicker and colored, these last operations are consequently impeded by the stuffing. There is a gain of from twenty-five to fifty per cent., if not more, by my process—that is, in the amount of leather which can be buffed and colored by a given expenditure of labor.

The drying of the leather renders the buffing operation with the slicker more difficult. The stuffing of the leather operates to pre-

vent it from taking the color. Therefore, by applying the stuffing last, or after the buffing and coloring of the leather, it will be seen that there is a material saving in the process.

I claim—

1. The employment of caoutchouc, or a solution thereof, substantially as described, with the oil and tallow or fatty matters used in currying leather.

2. The employment of bees-wax and resin, or either, and a solution of caoutchouc, with the oil and tallow or fatty matters and in stuffing leather, they being combined as set forth.

3. Buffing the leather with a slicker while such leather is damp, and subsequently coloring such leather and applying the stuffing to it, as specified, (not meaning to claim the application of the stuffing to the leather,) and subsequently carrying on the operations of stuffing and coloring, as set forth.

THOMAS McDONALD.

Witnesses:
R. H. EDDY.
F. P. HALE, JR.

315

UNITED STATES PATENT OFFICE.

JOSHUA MERRILL, of Boston, Massachusetts.

Letters Patent No. 100,652, dated March 8, 1870.

Improved Compound for Stuffing Leather.

The schedule referred to in these letters patent and making part of the same.

To all whom it may concern:

Be it known that I, Joshua Merrill, of the city of Boston, in the county of Suffolk, and State of Massachusetts, have invented a new and useful compound for stuffing leather; and I do hereby declare that the following is a full and correct description thereof.

My invention consists in a new stuffing compound, composed of solid paraffine mixed with tallow, fish-oil, rosin, rosin-oil, and tar of commerce, or either of them.

Paraffine, having no tendency to absorb oxygen, acts as an antiseptic, preventing the oxidation of such substances as those above mentioned, and like substances, thereby preventing them from drying or hardening in the pores of the leather.

By "solid paraffine," I mean either the article known in the market as "scale paraffine," or that known as refined paraffine.

A compound composed of thirty-three parts paraffine, thirty-three parts rosin, twenty-four parts rosin-oil, and ten parts rendered tallow, makes a stuffing or dressing for leather of great value, finishing goat and sheep-skins so that they resemble calf-skins. It renders them very soft and pliable, and they finish with a beautiful surface.

This compound also finishes calf-skins equal to the best French calf, and at comparatively small cost, as compared with the high-priced oils usually employed for dressing the finer kinds of leather.

A composition of thirty-three parts paraffine, thirty-three parts rosin, fourteen parts rosin-oil, ten parts North Carolina tar or tar of commerce, and ten parts of tallow or fish-oil, also makes a very valuable compound for stuffing leather.

In manufacturing my paraffine stuffing compound, I use a kettle heated by fire directly applied, or by steam heat, (by means of a double-walled kettle,) such as usually employed in melting glue, into which I first put the paraffine, then the rosin-oil and tallow or fish-oil, with the tar, when used, and heat them until thoroughly melted and heated to about 220° Fahrenheit.

I now add rosin of good quality in small amounts, constantly stirring until I add the whole quantity to be used, and continue the heat and stirring till all is melted.

I then allow it to rest until it is clear and bright, when it is ready to be put in packages for use, if the operation has been properly conducted.

The paraffine stuffing compound thus made will be clear and bright, and when rubbed between the fingers will be soft and unctuous like a very thick fatty matter. When cold; it is of the consistency of very solid fatty matter, and is removed from the package by scraping it.

I am aware that solid fats, like tallow or tallow and tar of commerce, also rosin-oil mixed with rosin, have been used for stuffing leather, the mixture of tar and rosin and rosin-oil giving greater consistency to the tallow, and such combinations answer a good purpose, but are apt to become hard in time, and make the leather to which they are applied dry and stiff, whereas the paraffine compound I use causes the leather to remain soft and pliable for a long time.

I do not wish to confine myself to the exact proportions of paraffine, rosin, rosin-oil, tar, and tallow, or fish-oil above given, for I find I can vary the proportions considerably, with good results.

In some cases I use as much as fifty parts rosin, but I find that a less proportion than twenty-five per cent., by weight, of paraffine is not so reliable and valuable as a stuffing compound, as it loses when mixed less than twenty-five per cent., its antiseptic power in a considerable degree.

I claim the paraffine stuffing compound for stuffing leather, composed of solid paraffine mixed with rosin-oil, tallow, or fish-oil, and rosin or tar of commerce, substantially as specified.

JOSHUA MERRILL.

Witnesses:

CHAS. H. PLIMPTON,
DAVID DUNLAP.

316 *Opinion of the Court.*

The following is the opinion of the court, in accordance with which the decree of March 12, 1889, was entered dismissing the bill of complaint in this cause with costs:

Circuit Court of the United States, District of Massachusetts. In Equity.

HERMAN ROYER
v.
WILLIAM COUPE *et al.* } No. 1974.

Opinion of the court (March 12, 1889).

COLT, *J.*:

This suit is for the alleged infringement of letters patent No. 149,954, dated April 21, 1874, granted to Herman Royer, the complainant, for an improvement in the treatment of rawhide for belting. The patent is for a process consisting of a series of steps which are set forth in the specification.

The language of the claim is as follows: "The treatment of the prepared rawhide in the manner and for the purposes set forth."

The method or treatment described in the specification consists of a series of eight successive steps:

1. The removal of the hair from the hide by means of sweating.
2. Drying the hide perfectly hard.
3. Inserting the hard dried hide in water for ten or fifteen minutes.
4. Fulling or softening the hide by mechanical means.
5. Spreading upon the hide in a warm liquid state a mixture composed of twenty parts tallow, two parts wood tar, and one part rosin.

317 6. Fulling or stuffing this mixture into the hide in a suitable machine.

7. Moistening the hide with water four or five times during the day.
8. Stretching the hide and cutting into pieces suitable for belting.

In the construction of this patent, the question meets us at the outset whether the claim was intended to cover all or only a part of the successive steps which compose the Royer treatment, as described in his specification. The ambiguity arises from the wording of the claim. The language is: "The treatment of the prepared rawhide in the manner and for the purposes set forth." Does this mean the method of preparing rawhide in the manner set forth, or do the words "prepared rawhide" signify a hide which has been subjected to one or more of the steps which make up the Royer process and, as a result, limit the claim to the subsequent steps of the process?

This is an important inquiry, because if the claim covers all the steps of the Royer method then it is manifest that the defendants do not infringe, because they do not use the first step of that pro-

cess. They do not remove the hair by means of sweating, but they make use of the liming process for such purpose, which Royer states in his specification is to be avoided in his method.

From a careful reading of the whole patent and in view of what took place in the Patent Office, I have reached the conclusion that the claim covers and was intended to cover the whole treatment described by Royer and not a part of that treatment; that the claim means the same as if it read, "the method of preparing rawhide in the manner set forth." This is the only consistent construction which can be given to the claim. Prepared rawhide means
318 the finished product, and not the hide subjected to one or more steps of the process described. Such appears to be the sense in which the patentee uses the word in his specification. He says:

"In order to more fully understand my mode of preparing hides I avoid the use of lime, acid, or alkali, for just to the amount a hide is impregnated with such substances it suffers in its tensile strength and toughness. I am aware that hides and skins have been prepared by a fulling or bending operation to render them pliable, but this mode alone does not answer for the preparation of machine belts and lacing. It is necessary to make use of a preparation substantially such as before described to render the rawhide fit for use and durable."

The plaintiff lays stress upon the following words in the specification: "After the removal of the hair from the hide by means of sweating, a process familiar to every tanner, the hide is dried perfectly hard," as indicating that the phrase "prepared rawhide" contained in the claim signifies a hide after it has been submitted to the sweating process. This is an ingenious and strained interpretation and is not consistent with the evident meaning of the word "prepared" as used generally in the specification.

Further, the file-wrapper in the Patent Office throws light upon the real scope of the Royer patent. Royer sought to limit his claim to a method of preparing rawhides for belting by the fulling and bending operation and the preserving mixture, but this claim was rejected by the Patent Office and he acquiesced in the decision. The Patent Office intimated, however, that a claim for the treatment of rawhides in the mode described in his patent might be allowed, and Royer accordingly amended his specification and claim in conformity with this suggestion, and the patent was consequently granted. In view of the prior state of the art Royer was not entitled to a broad claim for a process which should embrace only the fulling and bending operation and the preserving mix-
319 ture, composed of tallow, tar, and rosin, for both of these things, as applied to converting hides into leather, were old. It follows that the only subject-matter of invention which Royer could properly claim was the whole process described in his patent comprising the different steps therein set forth. The most that can be said of the Royer patent is that it was for an improved process, and in this view it must be shown that the defendants use all the different steps of that process, otherwise there can be no infringe-

ment. The defendants do not use the sweating process, which is the first step in the Royer treatment, and therefore they do not infringe. This patent has been construed by Judge Drummond, in the case of Royer *v.* Chicago Manufacturing Co., 20 Fed. Rep., 853, and I agree with the conclusion he reached, namely, that "If this is a valid patent for a process it must be limited to the precise or certainly substantial description which has been given in the specifications, and in order to constitute an infringement of that process a person must be shown to have followed substantially the same process, the same mode of reaching the result as is described in the specifications."

This case has been ably presented on both sides. If the contention of the counsel for the plaintiff was correct that Royer had invented an entirely new process which had revolutionized the art of preparing rawhide for belting and other purposes, it might be that the court should give that broad construction to this patent which is justified in the case of a foundation patent, but when we find, as in this case, that the substantial steps in the process are all old the utmost that Royer is entitled to is protection against those who use in substance his precise process.

Bill dismissed.

320 *Clerk's Certificate.*

UNITED STATES OF AMERICA, *Massachusetts District,* } *ss:*

I, John G. Stetson, clerk of the circuit court of the United States within and for the first circuit and district of Massachusetts, certify that the foregoing is a true copy of the record of said circuit court in the cause in equity entitled—

HERMAN ROYER, Complainant,
v.
WILLIAM COUPE *et al.*, Defendants. } No. 1974.

lately determined in said circuit court, and of all proceedings therein and of the opinion of the court filed therein.

In testimony whereof I hereunto set my hand and affix the seal of said circuit court, at Boston, in said district, this twentieth day of July, in the year of our Lord one thousand eight hundred and eighty-nine, and of the Independence of the United States the one hundred and fourteenth.

Seal of the Circuit Court, Massachusetts.

JOHN G. STETSON, *Clerk.*

321 (*Bond to Party on Appeal.*)

Know all men by these presents that we, Herman Royer, of San Francisco, in the State of California, as principal, and A. L. Tubbs and Abner Doble, as sureties, both of said San Francisco, are held

and firmly bound unto William Coupe and Edwin A. Burgess, both of Attleborough, in the State of Massachusetts, copartners under the name and style of William Coupe & Co., in the full and just sum of six hundred dollars, to be paid to the said William Coupe and Edwin A. Burgess, their certain attorneys, executors, administrators, or assigns; to which payment, well and truly to be made, we bind ourselves, our heirs, executors, and administrators, jointly and severally, by these presents.

Sealed with our seals and dated the 18th day of April, in the year of our Lord one thousand eight hundred and eighty-nine.

Whereas lately, at a circuit court of the United States within and for the district of Massachusetts, in a suit in equity depending in said court between the said Herman Royer, complainant, and the said William Coupe and Edwin A. Burgess, defendants, decree was rendered against the said complainant, and the said complainant having obtained an appeal to remove the said cause to the Supreme Court of the United States to reverse the decree in the aforesaid suit, and a citation directed to the said defendants, citing and admonishing them to be and appear at a Supreme Court of the United States to be holden at Washington on the second Monday of October next:

Now the condition of the above obligation is such that if the said complainant shall prosecute his said appeal to effect and answer all damages and costs if he fail to make his plea good, then the above obligation to be null and void; otherwise to remain in full force and virtue.

HERMAN ROYER. [L. S.]
A. L. TUBBS. [L. S.]
ABNER DOBLE. [L. S.]

Signed, sealed, and delivered in presence of—
M. A. WHEATON.
F. J. KIERCE.

Approved:
LE BARON B. COLT,
U. S. Circuit Judge.

A true copy of the bond taken by the judge at the time of allowing the appeal named in said bond; which bond is on file in the office of the clerk of the circuit court of the United States for the first circuit and district of Massachusetts.

Attest:
JOHN G. STETSON,
Clerk U. S. C. C., Mass. Dist.

Endorsed on cover: Case No. 13,628. Massachusetts C. C. U. S. No. 410. Herman Royer, appellant, *vs.* William Coupe and Edwin A. Burgess, copartners under the name & style of William Coupe & Company. Filed September 7, 1889.

and firmly bound unto William Coupe and Edwin A. Burgess, both of Attleborough, in the State of Massachusetts, copartners under the name and style of William Coupe & Co., in the full and just sum of six hundred dollars, to be paid to the said William Coupe and Edwin A. Burgess, their certain attorneys, executors, administrators, or assigns; to which payment, well and truly to be made, we bind ourselves, our heirs, executors, and administrators, jointly and severally, by these presents.

Sealed with our seals and dated the 18th day of April, in the year of our Lord one thousand eight hundred and eighty-nine.

Whereas lately, at a circuit court of the United States within and for the district of Massachusetts, in a suit in equity depending in said court between the said Herman Royer, complainant, and the said William Coupe and Edwin A. Burgess, defendants, decree was rendered against the said complainant, and the said complainant having obtained an appeal to remove the said cause to the Supreme Court of the United States to reverse the decree in the aforesaid suit, and a citation directed to the said defendants, citing and admonishing them to be and appear at a Supreme Court of the United States to be holden at Washington on the second Monday of October next:

Now the condition of the above obligation is such that if the said complainant shall prosecute his said appeal to effect and answer all damages and costs if he fail to make his plea good, then the above obligation to be null and void; otherwise to remain in full force and virtue.

HERMAN ROYER. [L. S.]
A. L. TUBBS. [L. S.]
ABNER DOBLE. [L. S.]

Signed, sealed, and delivered in presence of—
M. A. WHEATON.
F. J. KIERCE.

Approved:
LE BARON B. COLT,
U. S. Circuit Judge.

A true copy of the bond taken by the judge at the time of allowing the appeal named in said bond; which bond is on file in the office of the clerk of the circuit court of the United States for the first circuit and district of Massachusetts.

Attest:
JOHN G. STETSON,
Clerk U. S. C. C., Mass. Dist.

Endorsed on cover: Case No. 13,628. Massachusetts C. C. U. S. No. 410. Herman Royer, appellant, *vs.* William Coupe and Edwin A. Burgess, copartners under the name & style of William Coupe & Company. Filed September 7, 1889.

146 U S 524

Office Supreme Court U. S.
FILED.
NOV 25 1892
JAMES H. McKENNEY,
CLERK

No. 82.

OCTOBER TERM, 1892.

In the Supreme Court of the United States.

HERMAN ROYER, *Appellant,*

vs.

WILLIAM COUPE and EDWIN BURGESS, *Appellees.*

APPELLANT'S BRIEF.

M. A. WHEATON,
Counsel for Appellant.

GEO. SPAULDING & CO., PRS., 414 CLAY ST., SAN FRANCISCO.

In the Supreme Court

OF THE

UNITED STATES.

OCTOBER TERM, 1892.

APPEAL FROM THE CIRCUIT COURT OF THE UNITED STATES FOR THE DISTRICT OF MASSACHUSETTS.

HERMAN ROYER,
Appellant,
vs.
WILLIAM COUPE AND EDWIN BURGESS, COPARTNERS UNDER THE NAME AND STYLE OF WILLIAM COUPE & COMPANY.
Appellees.

APPELLANT'S BRIEF ON THE APPEAL.

Statement.

This was an action brought by the appellant for an alleged infringement of United States Letters Patent No. 149,954, bearing date April 21st, 1874, the application for which was filed in the Patent Office December 31st, 1872. The patent as en-

titled, is for an "Improvement in the modes of preparing Rawhide for Belting," and was granted to the appellant, Herman Royer, as the original inventor of the improvement. The action was brought by bill in equity, the bill being filed February 6th, 1884. The bill is in the usual form, and no exceptions have been taken to it.

The patent describes a *treatment* of *rawhides* by which they are converted into a new and valuable article of commerce, and yet *always remain rawhide*, never being converted into leather. The article into which the hides were manufactured by the patented treatment was named by the patentee "Fulled Rawhide." It was soft and pliable, possessed enormous tensile strength, was tough and resisted abrasion with much greater power than any species of leather that had ever been manufactured from animal hides. The "fulled rawhide" is especially valuable for swiftly running machine belts and lacing. The claim of the patent is, "The treatment of the prepared rawhide in the manner and for the purposes set forth."

An answer was filed by both of the defendants May 9th, 1884. (Record, pages 3 to 6.)

The answer admits the granting of the patent, but denies that the complainant was the original and first inventor of the invention patented to

him. It also denies the allegation that the invention was not in public use or on sale more than two years prior to the complainant's application for the patent therefor. It also denies that the defendants have infringed the patent.

The answer denies the utility of the treatment patented, averring that it will not accomplish the result claimed for it. It then assumes to interpret the patent; to tell what it is for; and to state the several steps which must be taken in following out the method of rawhide treatment provided for in it. It also assumes to state that the supposed importance of the alleged invention consists in the avoidance of the use of lime, acid, and alkali in the treatment of hides.

The answer further avers that the process used by the defendants is not that covered by the patent, but that it is the same process which the defendants used long prior to the complainant's invention.

It then avers that all the steps set forth in the patent had been separately used and were in common use long prior to complainant's invention, and that his patent must be narrowly construed.

It then avers that the process of unhairing hides by sweating was old, as was also the fulling of hides, and also the stuffing of hides with stuffing compounds mentioned in the answer, and avers

that the same was described in a certain patent granted to Joshua Merrill, March 8th, 1870, and in other publications and patents.

It then repeats that the complainant was not the first and original inventor of the invention patented, but that the same had been used by others prior to his invention, but that the defendants do not know who it was that so used it; and it further avers that the invention was in public use and on sale for more than two years before the patent was applied for.

The answer then avers that the defendant William Coupe obtained U. S. Letters Patent No. 182,106, on the twelfth day of September, 1876, under which the defendants manufacture, and, by use of the process therein described and improvements therein, they manufacture a better product than can be made under the complainant's process. The answer then closes in the usual form.

A replication to the answer was duly filed.

The patent sued on is on pages 215 and 216 of the record. It has but one claim and that is as follows:

"The *treatment* of the prepared rawhide in the manner and for the purposes set forth."

The treatment described in the patent consists in substance in subjecting hard, draw rawhide to

a mechanical action that will loosen its fibers, and thereby soften the hide mechanically, and at the same time working into the hide by the same mechanical action a stuffing composed of *tar*, rosin and tallow.

By this treatment Royer succeeded in manufacturing the rawhides into a new article of commerce to which he gave the name of "fulled rawhide." It proved to be an article of great value and has gone into general use. When finished the article *was not leather* but still remaided *rawhide*. It was *rawhide* when the treatment commenced; it remained *rawhide* all the way through the treatment, and it was still *rawhide* after the treatment was finished and it remained *rawhide* until it was worn out when applied to its appropriate uses. *It never became leather*. It was soft and pliable, of enormous tensile strength, tough, and possessed far greater power to resist abrasion than any kind of leather that has ever been made.

Royer commenced his experiments in 1867. Rawhide, in its natural condition, is hard and horny when dry and when in a damp or moist place it will mould and rot and putrify nearly the same as will raw meat. Like meat, it will also be devoured by rats, mice and vermin.

At the time Royer commenced his experiments

it was well known that hard, dry rawhide could be mechanically softened by bending or twisting operations, but until he worked out the discovery in the years 1869, 1870, and 1871, no methods had been discovered by which such mechanically softened rawhide could be prevented from returning to its hard condition when left in dry places, as it would do naturally, or from moulding and rotting when in damp places, nor had any means been discovered that would prevent its being devoured by rats, mice and vermin.

One peculiarity of rawhide, in which it differs from leather, is that it will not absorb either tar or any kind of grease or oil when the same are applied to its surface, while leather will absorb both. Both rawhide and leather will, however, absorb water. This difference between the nature of rawhide and that of leather made it impossible to apply grease or tar to rawhide in the same manner that stuffings had been usually applied to leather. Rats, mice and vermin will not devour leather as they will rawhide, and hence some remedy had to be discovered and applied to the rawhide to prevent its being devoured, which remedy had never been required for leather.

In treating the rawhides mechanically they had to be slightly moistened, or otherwise the dry bending would break and spoil them. At the

same time if they were too wet the moisture would make them soft, and the mechanical action would not loosen their fibers nor have any effect upon them, because being "water soft" they would bend without any loosening or separation of their fibers.

No two animal hides are of the same thickness, and some parts of the same hide is three times as thick as other parts of the hide. Some of the difficulties to be overcome was that of properly moistening the hides and obtaining a machine that would reduce the thick and thin parts of the hide alike, and that would also reduce alike different hides of different sizes and different degrees of thickness. This difficulty was overcome by a machine which was patented to the appellant and his brother, Louis Royer, May 12, 1868. The latter patent is in the record at pages 226 and 227. It was the subject of litigation and was passed upon by this Court in the case of *Royer* vs. *The Schultz Belting Co.*, reported in 135 U. S., 319. That machine is referred to in the patent on which this suit is brought as the proper machine to use in applying the "treatment" covered by the patent.

The natural tendency of rawhide, after it was softened by mechanical action, was to return back to a hard condition, when it was kept dry so that

it would not spoil from mould and putrifaction. The grease and oil ordinarily used for stuffing leather did not prevent these results in rawhide, so that after the machine of 1868 had been completed, and rawhide had been softened and filled with grease and oil in that machine, the desired article now called fulled rawhide, was not yet produced, nor was it yet known whether any additional treatment could ever be discovered that would preserve the softened rawhide from rotting or from turning back to its hard condition or from being devoured by rodents, etc.

The appellant continued his efforts and experiments, trials and tests until in 1871 he had tried and tested the treatment described in the patent sued on, and he then believed he had succeeded in producing the desired article, which was a rawhide reduced to a soft and pliable condition, and that would remain in such condition, free from danger of being devoured by rodents and which article therefore would become an article of commerce. About the first of the year 1872, he shipped some of his fulled rawhide to John Fell, a commission merchant, at No. 9 Jacob St., New York. Fell did not sell the rawhides, but left them in the store, and in September of 1872, Royer went to New York, and there found the same fulled rawhides in perfect condition and pre-

servation, and then, for the first time, he felt entirely certain that he had produced the desired article. He then took steps to apply for and obtain the patent sued on.

What was new in the treatment described in the patent sued on over and beyond what was described in the said machine patent of May 12, 1868, was that a *different kind of stuffing was used* and the *stuffing was worked into the hides during the mechanical softening operation of the hides in the machine.* These differences are all important, and neither the defendants, nor anyone else, has yet succeeded in making the new article of fulled rawhide without using those differences. The invention covered by the patent consisted not only in applying the differences mentioned, but it consisted more largely in *discovering* that, if applied to what was already described in the said machine patent, the result would be the production of the new article of fulled rawhide. The fact that the application of the treatment described in the patent sued on would change hard, dry rawhide into fulled rawhide *was an original discovery of Royer's.* That *any means* applied to rawhides in any form would result in the production of such an article, was an original discovery with Royer. Until he applied the treatment described in the patent sued on and discovered that it would produce the said

article, such an article had never been produced, and *it was not known that it could be produced by any means whatever.* In fact, it was not believed by the tanning fraternity that any such or similar article could be produced. This is shown in the testimony of Mr. Royer.

Record, pages 15 and 16.

The invention covered by the patent sued on consisted in contriving a treatment that would produce the desired result, in conceiving the idea that it would produce such result, and in testing the treatment and thereby discovering that it would produce the result.

The invention was made up of the conception of means to produce a new and useful result, of the contrivance of the method of applying the conceived means, of the practical testing of such means, and in discovering that such means would produce the result sought for.

The defendants, at the time that Royer sent his goods to New York, were manufacturers of various kinds of leather in Massachusetts. About 1875, some three years after Royer had put his fulled rawhide upon the Eastern market, the defendants commenced to manufacture a similar article. In 1878, the defendant, William Coupe, obtained two patents on machines for what he called boarding or breaking rawhides.

In May, 1881, he obtained still another patent on such machines. These patents are shown in the record from pages 216 to 223.

All of these patents are for machines that in all essential particulars are the same as the Royer machines of 1868. In all of the machines there is a central revolving shaft to which one end of the hides are attached. This central shaft in all of the machines is surrounded and enclosed by some kind of a stationary case or curb which surrounds and presses the outside of the coils of hides very tightly when the hides are wound around the central shaft. All of the machines have devices for producing endwise pressure upon such coils of hides in the machines. All of the machines are operated by winding the hides around the central shafts until they are wound into a coil that fills tightly the surrounding crib or case. In all of the machines, after the hides are wound into such a coil around the central shaft such central shaft is reversed and turned in the opposite direction and the coil of hides, under great pressure, are rewound in the opposite direction. This operation carries a sharp progressive bend through the hides from the ends that are fastened to the central shaft to the extreme opposite ends, when the shaft is again reversed and the operation is again repeated. The reversing of the central shafts and repetitions

of the operation are continued until the hides are softened.

No machines have ever yet been discovered that will successfully reduce rawhide to a soft pliable condition, the thick parts equally with the thin, except such machines as are above described.

In September, 1876, the defendant, Coupe, obtained another patent for what he called "improvements in processes for the manufacture of rawhide." This patent is in the record at pages 224 and 225.

The processes described in the last patent the defendants do not use.

What the defendants have used is shown in the deposition of Mr. Coupe himself as shown from page 8 to page 13 of the record. The defendants treat their hides in substantially the same kind of a machine as Royer uses; they put the dry, unhaired, hard rawhides into such machine in a slightly moist condition, the same as does Royer; their machine softens the dry, hard rawhides by mechanical action the same as does Royer's; and the defendants work into their hides by the mechanical action of the machine while the hides are being softened in them, a stuffing containing *tar*, tallow, beeswax and rosin, which stuffing contains all the essential ingredients of Royer's stuffing. By this treatment of the dry hard rawhides by

the defendants they produce an article of commerce which is the same in all its characteristics as the fulled rawhide which Royer produces by his patented treatment.

The hides are prepared by both Royer and the defendants, by first removing the hair from them by well-known and ordinary methods, the same that were commonly used by tanners for unhairing hides that were to be manufactured into ordinary leather. One of these methods is unhairing the hide by the sweating process. Royer preferred and used this method. The defendants unhair by using lime, and after the hair is removed, drenching the hides, and thereby removing the lime from them. In both instances, after the hides are unhaired, or unhaired and drenched, they are dried hard.

The defendants claim that the patent should receive a very narrow construction, and that as they prepare their hides for the fulling and stuffing operation by using lime for unhairing, and then drenching and drying the hides, while Royer unhairs by the sweating process, and dries his hides without drenching, that they have not infringed the patent.

The complainant, on the other hand, asserts that the defendants' treatment is covered by his patent, and that they infringe it.

The Circuit Court decided that the patent must receive a very narrow construction, and that as the defendants unhaired their hides by the liming and drenching process, while the appellant unhaired by sweating, that the defendants did not infringe the patent.

The opinion of his Honor, Judge Colt, is in the record, beginning on page 239.

The questions involved in this case are:

First. As to the validity of the patent sued on. This question arises under the answer wherein it denies that the appellant was the original and first inventor of the patented improvement, and denies that the same was not in public use or on sale for more than two years before the patent was applied for.

Second. As to the proper construction to be given to the claim of the patent. This question arises under the pleadings and also under the testimony.

Third. As to whether or not the defendants had infringed the patent. This question also arises under the pleadings and under the testimony.

Assignment of Errors.

The appellant claims, and assigns as error on this appeal:

That the Court erred in holding and deciding that the unhairing of the hides by the sweating process was any part of the patented treatment that is covered by the claim of the patent. Also,

In holding and deciding that the method adopted by the defendants of unhairing the hides by liming and then drenching the hides, and thereby removing the lime, was not equivalent to, and substantially the same thing as unhairing the hides by sweating. Also,

In holding and deciding that the defendants did not infringe the complainant's patent.

Argument.

The specifications of the patent in suit are short and are as follows:

"UNITED STATES PATENT OFFICE.

"HERMAN ROYER, OF SAN FRANCISCO, CALIFORNIA.

"*Improvement in the Modes of Preparing Rawhide "for Belting.*

"Specification forming part of Letters Patent No. "149,954, dated April 21, 1874; application "filed December 31, 1872.

"TO ALL WHOM IT MAY CONCERN:

"Be it known that I, Herman Royer, of San

" Francisco, County of San Francisco, State of " California, have invented an improvement in the " treatment of rawhide, especially for the use of " belts and laces, of which the following is a " specification:

" After the removal of the hair from the hide " by means of sweating—a process familiar to " every tanner—the hide is dried perfectly hard. " Then it is inserted in water for ten or fifteen " minutes, long enough to lose its extreme stiff- " ness. In this condition the process of fulling is " commenced. This may be done in a machine " constructed for this purpose and patented by me " May 12, 1868, under No. 77,920. Before the " hide is passed into the machine the second time it " is stuffed with a mixture of twenty parts tallow, " two parts wood-tar, and one part rosin. About " two pounds of this mixture is put on a steer " hide in a warm liquid state with a brush. After " the hide leaves the machine the second time, it " is ready for the next operation. It is then " moistened with water four or five times during " the day. The next day it is stretched and cut " into pieces suitable for belting. For purposes " of lacing the thinnest hides are selected, and " after they are gone through the same mode of " treatment as hides for belting, they are shaved,

" oiled, and hung up to get perfectly dry, when " the hide is cut into strings.

" In order to more fully understand my mode " of preparing hides I avoid the use of lime, acid, " or alkali, for just to the amount a hide is impreg- " nated with such substances it suffers in its tensile " strength and toughness; a slow but constant dis- " solution is going on with hides so impregnated. " If the effects of the aforesaid substances are in " some way neutralized, which must be a chemical " one, the hide suffers again in this process. The " power to resist abrasion, and the extreme tensile " strength for which pure rawhide is noted, are " irreparably lost.

" I am aware that hides and skins have been " prepared by a fulling or bending operation to " render them pliable, but this mode alone does " not answer for the preparation of machine belts " and lacing. It is necessary to make use of a " preparation substantially such as before described " to render the rawhide fit for use and durable.

" The tallow has the effect of imparting a high " degree of elasticity and keeps the moisture. " The wood-tar prevents dogs, cats, mice, vermin, " etc., from attacking the hide, at the same time " causing the tallow to enter the hide quickly and " thoroughly. The rosin gives the belting a cer- " tain solidity and glossy appearance, and assists

" also to prevent animals and vermin from attack-
" ing the belting. Belts and lacing made of such
" prepared hide are in all respects stronger, more
" lasting and cheaper than those made from com-
" mon leather.

" Having thus fully described my invention, I
" desire to claim:

" The treatment of the prepared rawhide in
" the manner and for the purposes set forth.

" This specification signed this 30th day of
" November, 1872.

" H. ROYER."

" Witnesses:

" E. V. TUTTER,

" WILLIAM FIRDERER."

In its opinion (Record 239), the Circuit Court held that the method of treatment described in the patent consisted of a series of eight successive steps, and that they were as follows:

" 1. The removal of the hair from the hide by
" means of sweating.

" 2. Drying the hide perfectly hard.

" 3. Inserting the hard dried hide in water for
" ten or fifteen minutes.

" 4. Fulling or softening the hide by mechan-
" ical means.

" 5. Spreading upon the hide in a warm liquid

" state a mixture composed of twenty parts tallow,
" two parts wood tar and one part rosin.

" 6. Fulling or stuffing this mixture into the
" hide in a suitable machine.

" 7. Moistening the hide with water four or
" five times during the day.

" 8. Stretching the hide and cutting into pieces suitable for belting."

The Circuit Court at the beginning of its decision quotes the claim of the patent: "The treatment of the prepared rawhide in the manner and for the purposes set forth," and then inquires whether the words "prepared rawhide," in the claim referred to, is the finished hide that has already been fully treated, or whether it refers to the hide when it has been subjected to one or more of the steps which make up the Royer process? This, the Court says, " is an important inquiry because
" if the claim covers all the steps of the Royer
" method, then it is manifest that the defendants
" do not infringe, because they do not use the first
" step of that process. They do not remove the
" hair by means of sweating, but they make use of
" the liming process for such purpose, which
" Royer states in his specification is to be avoided
" in his method."

The appellant claims that the " prepared rawhide" of the claim is the rawhide after it is

unhaired and dried hard. In unhairing the hides by either method there was nothing new. The hides so unhaired and dried were merely prepared for Royer's *first new step* in his new treatment. Hides were usually unhaired when they were to be made into any kind of leather. Unhairing was one of the ordinary methods of preparing hides for further treatment, that had been in common use from time immemorial. It was no part of Royer's new treatment, nor does the patent so represent. The patent says, in describing the treatment: "After the removal of the hair from the hide by means of sweating—*a process familiar to every tanner*, the hide is dried perfectly hard." This is every word that the patent says about unhairing by sweating, and in the same sentence in which the word *sweating* is used is the declaration that *it is a process that is familiar to every tanner*. Up to this point *the hides have received no new treatment and they have not been put into any new condition*. The patent further says that the hide is then inserted in water ten or fifteen minutes, long enough to lose its extreme stiffness. Of course there was nothing new in putting hard, dry, unhaired rawhides in water. Royer limits the length of time that the hides must remain in the water, and limits the effect of the water upon them by providing that they shall only be wet

enough to lose their extreme stiffness. The next remark of the patent is an important one as showing what the "prepared rawhide" of the claim refers to. It says: "*In this condition* the process of fulling is *commenced*." Here, evidently, is the *commencement* of the new treatment. The evidence shows that this fulling process of dry hides and stuffing them while being fulled in that kind of a machine *was new with Royer*. He and his brother had invented the machine before and had used it, but they *had not perfected any process or treatment that produced any valuable article*. This fulling, and stuffing while fulling, in that kind of a machine, was practically the *first of the steps in the new treatment* of hides that resulted in the production of fulled rawhide. The words "*in this condition* the process of fulling is *commenced*," shows that Royer considered that the hides should be put into the machine *in that condition*. Still others had for ages put hides in that same condition. When in this condition, however, the hides were "prepared" for the *beginning of the new treatment* which was the fulling and stuffing operation in that kind of a dry fulling machine, and they were to be continued in the fulling machine and were to be stuffed with a stuffing that was new to rawhides while they were being fulled in the machine, and the stuffing was to be worked into the hides

by the machine while the machine was making the hides mechanically soft. This was all *new* treatment. This entire reduction of the hide from a hard, dried, horny condition was done in the machine. After the hides were finally taken out of the machine, moisture was applied to them several times a day. This moistening was but a minor step. Almost the whole of the effective new treatment took place in the machine. We have already remarked that the hide must be in that *nearly dry condition* or the machine would not reduce it. Now, putting the hide into that condition was not new, unless the slight moistening might be so considered, but the subsequent treatment of fulling, and stuffing while fulling in the machine, was new, and it was Royer's invention, and the results of it were results that Royer discovered, and it was Royer that discovered that such a treatment would produce such results.

We respectfully submit that this is a reasonable view to take of the language used in the patent, and that the words "prepared rawhide," as used in the claim, refers to the hides when they were prepared for the new fulling and stuffing operation in the machine, and that the "treatment of the prepared hides" means the *new* treatment of those hides, which commenced after the unhairing process was finished.

The Circuit Court concluded that the words "prepared rawhide," as used in the claim, meant the finished fulled rawhide after it was entirely through with its treatment, and had passed through all of the successive eight steps which the Court found were specified in the patent. We urge that such construction of the claim was error. What the patent claims was the *treatment* of the prepared rawhide. How could there be any *treatment* of the hide which was *already finished and was not to be treated any more?* How can the Court reasonably conclude that a man of Mr. Royer's intelligence, as shown by his testimony in this case, intended to *claim a treatment* of the hides which *were not to be treated?*

We respectfully submit that the patent should be read in a reasonable sense, and that the language used therein should be given a reasonable construction, and the words allowed to have their usual natural meaning. If read in this light, then the treatment claimed would be the treatment that commenced, either with the hides after they were prepared by unhairing, or when they were first put into the fulling machine. The only difference between these two points of beginning would be the slight moistening of the hard dry hide so as to make it "lose its extreme stiffness." This would be an immaterial difference, since the defendants

have their hides in that slightly moist condition when they commence their fulling operation. (See deposition of defendant Coupe, Record, pages 8 and 9.)

The Circuit Court, in order to reach a decision to the effect that the claim of the patent covered the whole eight steps which it pointed out, found it absolutely necessary to transpose the language of the claim so that it should read in a different manner, and might be made to convey a different meaning from that which it conveyed before such transposition. It says in its decision, "the claim means the same as if it read the method of preparing raw hide in the manner set forth." By thus changing the language of the claim, the Court is able to give it an interpretation that it could not otherwise give it, and thus to make it include the preparatory steps of unhairing by sweating.

We urge that a patent which is taken out for a treatment of raw hides in a new manner, and which patent covers a new treatment which produced a new article of commerce that had never before been produced, and when, in connection with the patent, the testimony shows that the patentee was the first and original discoverer of the fact that such treatment would produce such an article, and also shows that there was no other known means by which that article could be

produced, that the patent ought to be given a liberal construction, and that its claim should at least be given all the scope which its language naturally implies, so long as such construction will not extend the monopoly of the patent beyond the invention or discovery which the patentee actually made.

We also urge that even if the patentee did specify all of the eight steps which the Circuit Court specified, that even then it was proved that the defendants infringed the patent. They use the same kind of a machine, they use substantially the same kind of a stuffing, they work the stuffing into the hides while fulling them in the machine, and in all respects they treat the hides in substantially the same manner as called for by the patent, and they produce the same kind of an article as that to which Royer gave the name of "fulled rawhide." The evidence shows that the defendants unhair by liming, but it also shows that as soon as the hair is off the hide they *immediately proceed to drench the hide* in a "bate" or liquid preparation *that removes every trace of the lime.* Royer testifies that the hides so prepared are in substantially *the same conditon as his hides are when they are unhaired by sweating.* (Record, page 20.) But more of this hereinafter.

We wish to fully discuss in this connection the

reasons given by the lower Court why the patent should be given a narrow construction, and in so doing we hope to show that those reasons are not sufficient to justify the Court in reaching the conclusions which it did.

In its decision the Court says:

"In view of the prior state of the art Royer "was not entitled to a broad claim for a process "which should embrace only the fulling and bend- "ing operation and the preserving mixture com- "posed of tallow, tar and rosin, for both of these "things, as applied to converting hides into "LEATHER, were old."

We have already stated the distinction between fulled *rawhide* and *leather*. No *leather* had ever received the treatment called for by the patent. If it had it would have been in rags and unfit for anything. The patented treatment is the salvation of fulled *rawhide*, but it would be the destruction of *leather*. Well known as the treatment now is *it is never applied to* LEATHER.

It was proved that unhairing by both methods is common for almost all kinds of leather. It was also proved that many kinds of stuffing, some of which would be substantially the same as that named in the patent, had been applied to *leather*. It was also proved that *leather* would absorb such stuffings by merely spreading the stuffing on the

face of the leather, but that *rawhide would not* absorb it. Bending the leather back and forth might hasten the absorption of such stuffings.

Those stuffings had never been worked into dry rawhides, mechanically or otherwise, and it was not known what effect such stuffings would have if forced into rawhide by mechanical means. Until Royer found it out, the world did not know that an article similar to Royer's fulled rawhide could be produced *by any means.* It was Royer alone who discovered that such stuffings when worked into rawhide would preserve the same, under different circumstances and atmospheres, in a soft pliable condition, and it was Royer alone who also discovered that such stuffings worked into rawhide would protect them from being eaten by rats, mice and vermin; it was Royer alone who discovered that his treatment would produce the article which he named fulled rawhide, and it was Royer alone who discovered that such an article as he produced by his treatment and named fulled rawhide *could be produced by any possible treatment.* Rats, mice and vermin would not devour leather whether it had those stuffings in it or not. Leather, however, prepared or tanned, had no nutrition for rodents.

Another fact that has been proved with regard to the stuffings of what has been called "oil

tanned leather," is that most of the oils used in treating them, and particularly fish oils, which were usually used, were oxidizing oils, and that they produced a chemical change in the hide. The oxidizing oils were the oils that were used in treating the oil tanned leathers, and those leathers were chemically changed from rawhide into some kind of leather. We intend in these remarks to include as "leather," buckskins, moroccos, glove leathers, chamois skins, army leather, and all those classes of similar soft goods, made from animal hides, which have been long known and in common use in the commercial and manufacturing world. Such goods were not tanned by the use of tannic acid, but yet they were chemically changed from rawhide. They were not Royer's new article, and they did not possess its advantages of enormous strength, and power of resisting decay indefinitely. His fulled rawhide is especially adapted to use as belting and lace leather. The former goods mentioned were not adapted, or used, for belting, and they were inferior to the new article when used as lace leather, and only a few varieties of them were used for lace leather at all. Any of those goods would readily absorb tar and grease by capillary attraction, while Royer's article could only be made by forcing those substances into the hides by power-

ful mechanical action. None of those goods would be eaten by rats, mice, or vermin, even though no tar was used on them, while Royer's would. Tar, in fact, was not used on those goods. It would have unfitted them for the uses to which they were applied. Gloves, etc., smelling of tar would not have found a market. The fuiled rawhides, whether made by Royer or by others have never been applied to the same uses to which the former goods mentioned were applied.

In its opinion the lower Court says:

"The most that can be said of the Royer patent " is that it was for an improved process, and in this " view it must be shown that the defendants use " all the different steps of that process, otherwise " there can be no infringement. The defendants " do not use the sweating process, which is the " first step in the Royer treatment, and therefore " they do not infringe."

We urge that the Court was wrong in this entire statement. More *is said*, by us, than the Court has stated, we do say that the claim is for a *treatment*, and that this treatment is something more than a mere process, using the word process in its ordinary literal significance. The process of spreading a mustard poultice and applying it for the purpose of raising a blister, is the same as the process of spreading a flaxseed poultice and

applying it for the purpose of soothing a local irritation. As *processes*, using the word as meaning "proceedings," the two operations are the are the same, but as *treatments*, they are very different. Witnesses have testified in this case that the process of treating hides, as described in the Royer's patent, of May 12, 1868, on the fulling machine, in which process only grease and oil were used and such grease or oil was not worked into the hides in the machine, and which process did not then and will not now produce the new article of fulled rawhide, was the same as the process of treating hides when the stuffing of tar and grease is used and is forced into the hides during the fulling operation, and by which fulled rawhide is produced. Even if the two *procesees* could be called the same, still the two *treatments* are so different that in one case rawhide could not be converted into the article of fulled rawhide and in the other case they could and would be so converted. The *treatment* is therefore something very different from the mere *process*, as the Court used the latter word. The claim does not call for a process, but it does calls for the treatment.

Again the statement in the opinion that the defendants do not infringe because they do not use the sweating process for unhairing we think is incorrect. If they do not use the sweating process,

they use a well known equivalent method. They unhair by liming, and then immediately bate, or drench the unhaired hides and remove every trace of lime from them. They therefore use an equivalent step which produces the same result, and this in law is the same as though they used the identical step mentioned in the patent.

While the Circuit Court and the defendants' witnesses have used the word "process" in place of the word "treatment" which the claim of the patent uses and have thereby been able to give the claim a difierent interpretation from any that could rationally have been given to it if they had adhered to the use of the word "treatment" we yet think that if they had given to the word "process" the meaning which this Court has given to it when applying it in patent cases to identify a patentable improvement in an "art" that even then the Court must have come to a conclusion in the complainants favor.

The only authority which we need to use to illustrate nearly, if not quite, every point in our case, is that of—

Tilghman vs. *Proctor*, 102 U. S., 707.

In that case, on page 722, a quotation is made from a former case of *Corning* vs. *Burden* (15 Howard, 252), which defines what a "process" is

as the term is applied in the patent law. Among other things it says:

"But where result or effect is produced by " chemical action, by the operation or APPLICA- " TION of some elements or power of nature, OR OF " ONE SUBSTANCE TO ANOTHER, such modes, meth- " ods, or operations are called processes. A new " process is usually the RESULT OF DISCOVERY; a " machine of invention. The arts of tanning, " dyeing, making water-proof cloth, vulcanizing " india rubber, smelting ores, and numerous others, " are usually carried on by processes as distin- " guished from machines. One may discover a " new and useful improvement in the process of " tanning, dyeing, etc., irrespective of any par- " ticular form of machinery or mechanical device. " And another may invent a labor-saving machine, " by which the operation or process may be per- " formed, and each may be *entitled to his patent.*"

According to the above definition, Royer's patent may cover a process in the strict patent law meaning of the term. He applied tar as one of the elements in the stuffing compound to rawhide for the first time. Tar was not named in the machine patent of 1868. This tar was applied to the raw hide. It was therefore an "*application of one substance to another.*" Royer discovered that by applying tar with the other elements of the stuffing

that he produced new and useful results, which were, that the rawhide would be preserved in its soft, pliable condition, and without decay, indefinitely, and be free from the attacks of rodents. He used the machine of 1868 for applying the stuffing, which included tar, to the rawhide. He therefore made a new and original application "*of one substance to another*" (the tar to the rawhide), and discovered that he produced a new result thereby. The new result was the production of the article of fulled rawhide, the very result that he was seeking for. This obtaining of the new article by the application of tar to the rawhide in connection with what had been applied before, brings the discovery and invention within the strict definition of "a process," as defined in previous decisions of this Court, and at the same time the operation of making the fulled rawhide as described in the patent sued on, *is not* the process of treating hides which is described in the machine patent of 1868, in which no tar was used, and by which the article of fulled rawhide could not be produced, and no stuffing was worked into the hides by, or in, the machine. Mr. Miller as well as Mr. Coupe were both in error when they testified, in effect, that the process described in the said machine patent of 1868 was the same process that is described in the patent sued on, and that

the addition of tar to the stuffing would not change the process. (See their testimony in the Record, pages 67 and 106.

The great effort of the defendants has been to make out that they do not infringe because they do not unhair by liming. They scarcely try to name any other defense. They have not plead or proved any anticipation of the patented treatment. Their treatment is so exactly like the patented treatment that they scarcely make any attempt to show that the patent does not cover their treatment from the time that the hides are unhaired. It has therefore become a necessity for them to obtain such construction of the claim of the patent that it must include the unhairing of the hides as one of the necessary steps in the patented treatment. Not only this, but they must then obtain a decision that the unhairing of the hides by liming and then washing the lime entirely out of the hide is not substantially the same step as unhairing the hides by sweating. On this account experts—so-called, but men who have never treated hides by tanning or otherwise, and whom to call experts is but enacting a transparent burlesque—are hired to testify and magnify the effects of lime upon the hides, also to testify to the ruinous effects of sweating, and then to give their opinions as to what interpretation should be given to the patents, etc., etc. Yet

after all of these efforts on the part of the defendants, and this testimony on the part of their hired witnesses, the facts remain substantially undisputed that the defendants' entire treatment is the same as that of the patent. They take substantially the same steps, take them in the same relative order, prepare their hides for fulling by a process that is strictly equivalent to that of sweating, as it leaves the hides in precisely the same condition for fulling. After the unhairing and moistening of the hides, they then proceed to full the same, stuff the same as the patent provides for, and in so doing they produce the same kind of fulled rawhide as the patented treatment produces, and they produce it from the same kind of hides. Unless the defendants are entitled to have a narrow construction given to a foundation patent, we are entitled to a reversal of the judgment.

The learned Judge of the Circuit Court refers to the decision of his Honor Judge Drummond, who also gave a narrow construction to the patent, and both of those judges referred to the file wrapper contents for a justification of such narrow construction. We will, therefore, now turn to such file wrapper contents. They are in the record from page 207 to page 214.

We think that these file wrapper contents do not justify any such conclusions as were reached

by the said judges. The decision of Judge Drummond is in the 20 Fed. Rep., 853. There were two patents involved in that decision, and the decision as to this particular patent begins on next to the last line on page 853. That case was somewhat different from the case at bar inasmuch as in that case the defendants had used as chemicals for tanning the hides (not for unhairing) alum and salt (see last half page 855), while in this case the defendants have not used any chemicals for tanning at all. It is proper for us to state here that we took an appeal in that case to this Court, but, on account of a misunderstanding of our local attorney in Chicago, the record remained in the clerks's office there, while we supposed it was in the clerk's office of the Supreme Court in Washington until it was too late to bring it up, and we hereby lost our appeal.

Returning to the file wrapper contents and examining them, it will be seen that the trouble arose there on account of the use of the word *leather* when the word *rawhide* should have been used. *The question as to whether the sweating process for unhairing should, or should not, be included as one of the necessary steps of the patent did not arise at all.* IT WAS NEVER MENTIONED THERE IN ANY FORM.

The difficulty was due entirely to the fact that

the agent whom Mr. Royer employed to take out the patent for him did not himself understand of what the invention consisted, and for this reason he used the word leather when he should have used the word rawhide. The original application that was filed for the patent was accompanied with a power of attorney appointing Henry Gerner, of New York, as Royer's attorney. Royer was in California and his attorney was in the East. In the original application the article produced by the treatment was called *leather* all through, although *the description of the treatment was nearly the same as it was when the specification was afterwards amended.* The application was rejected because the same stuffing had before been applied to *leather,* and, of course, the treatment in the hides in the Royer's machine, where oil and tallow were used as the stuffing, was shown in the former machine patent of May 12, 1868. In this former machine patent the article produced was also called "leather." (Record, first half page 226.)

As that machine patent called the article *leather,* and as the new application also called the article *leather* it must have looked to the Examiner of the Patent Office as though all that the application called for was a change of one kind of stuffing that was in common use for *leather,* for another kind of stuffing that was also in common use for

leather. Of course, the Examiner could see no invention in making such change so long as the application showed that the stuffings were still to be applied to *leather*, and he rejected the application. Mr. Royer then changed his attorney, and appointed L. W. Serrell in place of Henry Gerner.

The specifications were then amended as shown on page 210 of the Record. Still the amendment did not sufficiently show that the new article was rawhide, and not leather, and the application was again rejected, upon the ground, as the examiner stated, that "it was apparent that the only feature of novelty presented not embraced in applicant's original patent granted May 12, 1868, is the addition of "tar" and "rosin" as ingredients to the compound for preserving leather." The examiner referred to a former patent, granted to Joshua Miller, for a compound for stuffing *leather* and again rejected the application.

After this last rejection, Royer wrote to his attorney in New York, Mr. Serrell, and gave him a full explanation of what the invention and discovery consisted. Mr. Serrell thereupon wrote to the Patent Office the communication shown on the last half of page 211, of the Record, and *in this communication it was for the first time explained to the Patent Office that the article produced was not leather*. The communication says:

" The use of tar and tallow upon *leather* are ad-
" mitted to be old, but *rawhide fulled is not leather*,
" and those materials act with the fulled rawhide
" very differenlty from what they do with leather,
" and the rawhide fulled and prepared with such ma-
" terial is superior to that prepared under his former
" patent. He believes himself to be the first to
" have made this superior article, and that he is
" fully entitled to a patent."

This statement *told the exact truth* and from it the Patent Office, for the first time, understood what Royer had discovered and what he had produced, and that was a treatment for rawhides that would produce the new article of fulled rawhide. The moment that *the Patent Office understood that the treatment applied to rawhide and not to leather there was no further trouble.* Mr. Royer's attorney was at once advised that by amending the specifications *so as to make them apply to a treatment for rawhide*, that his application might receive favorable consideration. The amendment was made and the patent granted accordingly.

Now we repeat that in this Patent Office Record none of the criticisms appear which either of the Circuit Courts or the defendant's counsel have applied to the invention. *Not a word was said as to whether the treatment should include either of the old methods of unhairing or not.* Not a word was said

as to whether any alum and salt might be used in the treatment or not. Judge Drummond concluded from this Patent Office Record that Royer did not seem to know certainly what he had discovered; that "he had a serious struggle in obtaining the patent, and only obtained it after repeated applications, amendments and changes." Surely when Royer wrote to his attorney and made such an explanation of his invention, that the attorney saw that the invention applied to rawhides and did not apply to leather, and made the way clear for a proper patent to issue *for the actual invention made*, it looks like injustice to say that Royer did not seem to know certainly what he had invented. If the patent had been granted as first applied for, we doubt if it would have covered the actual invention made, or have been of any validity.

When the patent was applied for, Royer was in San Francisco, three thousand miles away from his attorney who applied for the patent. It is not to be wondered at that the attorney did not understand the invention from what description he then had of it. If he could have had conversations with Royer, and received full explanations of all that had been done and accomplished, it is probable that the patent would have been properly applied for in the first instance. At any rate, it is now certain that the invention applied to rawhides

only, and that it was not applicable to leather, and that the patent was not properly applied for because it, the application, did not describe the real invention. As soon as the real invention was made to appear to the Patent Office, that office granted the patent with a claim *limited to the treatment of* RAWHIDE, *but* UNLIMITED IN ANY OTHER WAY. The claim is as broad as language can make it, and confine it to the one subject of treating rawhides. We respectfully submit that there is nothing in the record of the Patent Office that limits the patent to any specific number of steps, or that tends to show that the patentee has limited himself to a treatment that makes the unhairing by sweating one of the necessary steps, so as to shut out other well known equivalent methods of unhairing and drenching which prepares the hides for the fulling operation by putting them in substantially (and we think *exactly*) the same condition that they would be in if unhaired by sweating.

What Boyer means when he says in his specifications that: "I avoid the use of lime, acid, or "alkali, for just to the amount a hide is impreg- "nated with such substances it suffers in its tensile "strength and toughness; a slow but constant dis- "solution is going on with hides so impregnated. "If the effects of the aforesaid substances are in

" some way neutralized, which must be a chemical " one, the hide suffers again in this process. The " power to resist abrasion, and the extreme tensile " strength for which pure rawhide is noted, are " irreparably lost," is to explain the difference between his article and those articles that were made by processes in which lime, and acid, and alkali were used as chemical agents to entirely change the nature of the hide *from rawhide* and make it into some of the several kinds of chemically tanned leather which we have mentioned, such as buckskin and other kinds of soft light leathers, which were made without the use of tannic acid. He was endeavoring to impress upon the attention of the public that his article was still "*pure rawhide*" when it was finished; that his article still continued to "resist abrasion," and still contained "the extreme tensile strength for which pure rawhide is noted;" that his article contained these qualities of "pure rawhide" because he avoided in his treatment the use of those chemical agents which had heretofore been used in making soft leathers. In making the assertion above quoted Royer was not referring so much to the unhairing process, which everyone understood, as to his *new* treatment which changed the natural hard unhaired rawhide into the fulled rawhide. The unhairing was no part of the *new* treatment to which

he was referring in the language above used. We are totally at a loss to understand why either of the circuit courts should have concluded that there was anything in the patent, or in the proof that would have justified giving to the patent a limited construction. It was fully proved that the treatment did produce a new article of commerce that never had been before produced, and which has never yet been produced except by using the treatment described in the patent. The article cannot be produced except by "avoiding the use of lime, acid, or alkali," to a very large extent. If the defendants do unhair with lime, they "avoid" it in all their subsequent steps, and as soon as the hair is off they drench all the lime off from the hide and so "avoid" nearly, if not entirely, all of the deleterious effects which the lime would otherwise have produced upon the hides. *Acid* they do not use at all, nor alkali. They have "avoided" all these substances to such an extent that they successfully "avoid" changing their rawhides into any kind of leather. They "avoid" these chemicals to such an extent that they "avoid" the production of any perceptible chemical action upon the rawhides.

Extracts from the defendants' business circulars are in the record at pages 172, 173 and 174. These circulars include correspondence of their custom-

ers, which the defendants published in their circulars, for the purpose of showing what their new article was. The names used in those circulars for the article are "rawhide lace leather," and "rawhide picker leather." One correspondent, Joseph Sharp, calls it "rawhide lace," not using the word leather at all.

At the beginning of the extract from the circular—record, page 172—the defendants say:

"Coupe's Patent Excelsior Rawhide Lace-
" leather.

"This is the only genuine article of rawhide
" lace-leather made in the United States. IT
" CONTAINS NO CHEMICALS OR TANNING OF ANY NAME
" OR NATURE; IT IS PURE RAWHIDE, FREED FROM
" ALL IMPURITIES AND SOFTENED BY A MECHANICAL
" PROCESS invented and patented by our Mr.
" Coupe."

Further along the same circular states that there are imitations of the article upon the market, "and
" they are very similar in appearance to the genu-
" ine, but ARE MADE BY A CHEMICAL PROCESS
" WHICH HAS A TENDENCY TO DESTROY THE NATURE
" OF THE HIDE AND AFTER A SHORT TIME MAKE IT
" WORTHLESS ON ACCOUNT OF ITS BECOMING TEN-
" DER."

Does not the above, when taken in connection with the proof that the defendants do not use

chemicals other than the trifling use of lime in unhairing, sufficiently demonstrate that the defendants do "*avoid* the use of lime, acid and alkali," in their treatment, and that by such avoidance they imitate Royer and use his inventions and discoveries and infringe his patent. The "avoidance" may be total or partial. In *Tilghman* vs. *Proctor*, there was a partial avoidance of the use of lime by the defendants while practicing a patented process in which the patentee avoided lime altogether, but this Court held it to be an infringement nevertheless.

See *Tilghman* vs. *Proctor*, 102 U. S., last half page 731.

The claim is: "The *treatment* of the *prepared rawhide* in the manner and for the purposes set forth."

The specifications show that the rawhide is "prepared" by unhairing the hide and drying it perfectly hard. It is then inserted in water from ten to fifteen minutes, just long enough to lose its extreme stiffness. In this condition it is treated to what the specifications call a "process of fulling," which may be done the patent says, in a machine patented May 12, 1868, under Patent No. 77,920. Before the hide is passed into the machine a second time it is stuffed with a mixture of

tallow, wood tar and rosin. This fulling and stuffing treatment is continued until the hide is cured. The fulling is accompanied with stretching and some other manipulation that is common to the treatment of the other hides. The specifications recommend the removal of the hair from the hide by sweating, which they say is "a process familiar to every tanner," for the purpose of avoiding the use of lime, acid or alkali.

Remembering that two Circuit Courts have given the patent sued on a narrow construction, we trust that this Court will pardon our present presentation of the case at considerable length and with some seeming repetitions.

In construing this patent it is to be borne in mind that the complainant is treating nothing but unhaired *pure rawhide*. He is not treating alum-tanned hides, nor tanned hides, nor prepared hides cured by any kind of chemicals whatever. His art is practiced upon rawhides, and rawhides alone. Neither alum-tanned hides, nor any hides which are cured by chemicals in any way, shape or manner, come within the description of his specifications. His new treatment *begins and ends upon* unhaired *pure rawhides*, and the article made *is rawhide* when it is finished. All the testimony therefore, which the defendants have put into the case regarding tanned-leather, glove-leather,

army leather, oil-tanned leather, buckskin, etc., etc., is entirely immaterial and irrelevant. It was so treated by the defendants' counsel in their printed brief in the Circuit Court, and probably they will so treat it on this appeal.

The great tensile strength of rawhides was well known. That this great tensile strength was lost to a greater or less degree by the use of chemicals was well known. That rawhide could be made soft and in appearance like leather by mere mechanical manipulation was also well known; and this was not a part of complainant's invention. The trouble was, however, that when rawhide was made soft by mechanical manipulation no means was known of keeping it in such soft condition except by the use of chemicals, and those chemicals always injured the leather, destroying in the beginning, to a large extent, its tensile strength, and, as the specification states, subjecting the hide to a constant subsequent dissolution.

The only object for which the complainant was striving for so many years, was to find some method by which rawhide could be prepared *without the use of chemicals which would deteriorate its strength and value*, and at the same time *preserve it against the possibility of its returning to its rawhide condition*, after being manipulated and made soft

by mechanical means, and *so preserve it that it could be made an article of commerce.* Until he did this thing it had never been accomplished, *although its accomplishment was an object which tanners had generally desired, and which they had as generally pronounced impossible.*

The long and trying but intelligent and indomitable struggle against natural obstacles which the world had never been able to overcome, is explained in Mr. Royer's testimony in the printed record, pages 13 to 21. We ask the Court to stop here and read this testimony, as it will make the remainder of this brief more comprehensive.

The machine patented to the two Royers in 1868, and its operation, is explained in the testimony last referred to, and every successful machine is constructed and operates similar to that machine.

Royer describes this fully in his testimony. He further says, in his said testimony:

"A. I commenced making experiments in "1867. At that time it was well known that "rawhide could be made soft and pliable by me- "chanical action. It was a very desirable article "to use while in this soft, pliable condition. Its "strength was enormous. It was not an article of "commerce, nor was it in common use, for the "following reasons: A piece of rawhide made

" soft by mechanical action would return natural-
" ly to a hard condition when laid away. In
" damp places it would mould and decay like so
" much putrid meat. It would also be eaten by
" rats, mice and vermin, whenever it was access-
" ible to them. Its early destruction from these
" or other causes was so certain to take place that
" it was not worth while to make it at all. It
" never was manufactured as an article to keep in
" stock, nor in any considerable quantity.

" The object and effect of my invention was to
" overcome all these objections, and to so far im-
" prove and modify rawhide softened by mechan-
" ical action, that it would become an article of
" commerce. This object and effect I finally ac-
" complished, and I succeeded in creating the
" article now known as *fulled rawhide*. In seek-
" ing to accomplish this object, about the first
" thing that I did was to finish a rawhide doubling
" machine, which had been already partly in-
" vented by my brother, Louis Royer. That
" finished machine is the same one that is de-
" scribed in patent number 77,920. I discovered
" finally that by making a mixture of tar, tallow
" and rosin, and working it into the hide while the
" hide was being treated in the machine as de-
" scribed in the patent, that the desired object was
" obtained, and the present article that is now on

" the market and known as fulled rawhide," was " the result of this treatment for rawhides.

" Q.—Do you know whether or not you were " the first person who ever made the article that " is *now on the market, and known as fulled raw-* " *hide?*

" A.—*Yes, I know that I was. I knew that the* " *tanning trade had long desired to learn some* " *method of treating rawhide so that it would retain* " *the properties of strength and lightness that be-* " *longed to it, when it was reduced to a soft condi-* " *tion by mechanical action;* and I know that no " one had ever succeeded in accomplishing this " result until I did it. *It is not possible that the* " *article could have been manufactured before I did* " *it without my having learned by this time that* " *such was the fact.* When I commenced my " experiments in 1867, the article that is now " known to the world as fulled rawhide had never " yet been made, *and the opinion of the tanning* " *fraternity was that such an article could not be* " *made.* I read the different authors on tanning, " and learned from the books, and from many " people engaged in the tanning business, the dif- " ferent known methods of tanning leather and " treating hides; *and yet with all the information* " *that I could obtain from all sources and all the* " *knowledge that I could gain from the developments*

" *resulting from my own experiments, it was about*
" *five years before I succeeded in manufacturing my*
" *fulled rawhide, and in testing it far enough to*
" *know that I had succeeded in obtaining the article*
" *I was trying to obtain*, that is, an article *of raw-*
" *hide* that would not be eaten by rats and mice,
" and that would be soft and pliable and strong,
" *and remain so when stored away as stock for a*
" *very long time.*"

On the following pages of the printed record are described by Royer the difficulties he met and overcame. The hides must be at just the right degree of moisture. If too wet the machine would have no effect, and the desired article could not be made at all from them. If too dry and hard other obstacles followed, and Royer struggled long in discovering whether or not there was any degree of moisture that would answer. Then, as no two hides were of the same thickness and the same hide was much thicker in some parts than it was in others, another problem was how to reduce the entire hide with so much difference in thickness to just the right degree of moisture. Hides would come out of his machine overheated and injured in some parts, while there were yet hard unworked spots in other parts of them. An almost insurmountable difficulty was the hard places that would remain in the hides. Besides all this, he

had to discover and apply means that would preserve the softened rawhides against moulding and decaying in damp places, and also prevent rats and vermin from eating and destroying them. It took many years before he accomplished all that was necessary to success, and during all that time he was struggling in the dark, *uncertain whether success was possible under the opposing laws of nature or not.* He, however, persevered until he succeeded, and patented his invention and became thereby one of the world's great benefactors.

The patent IS A FOUNDATION PATENT. The evidence *described in his patent created a new and needed article of commerce.* Up to the time that he produced under this process and placed upon the market the article which *afterwards became known as "fulled rawhide,"* such an article was unknown. Now, however, the aggregate value of the article produced each day amounts to many thousands of dollars.

The defendants have undertaken to meet this proof, not by showing that any article similar to *Royer's fulled rawhide* had ever been produced before, but by showing that a *different article produced by other* and well-known processes was *literally* "fulled rawhide," although *not known in commerce by such name.* Such articles were not known prior to Royer's invention, nor are they yet

known on the market as "fulled rawhide," *nor were they similar in character to the article which Royer produced and to which* HE *gave the* NAME *of "fulled rawhide."* It is not shown that the appellation "fulled" as used by Royer in naming his article would be literally correct if applied to it as an adjective for describing the quality or character of the article. In fact, the evidence fairly shows that the *word "fulled" does not give a description of the true character of the article.* The word "fulled" as used by Royer in giving the *name* "fulled rawhide" to *his* article is used more in an arbitrary sense *for the sake of giving a new name to a new article,* than in a literally descriptive sense for identifying the character of the article.

Defendants do not assert that any article manufactured prior to Royer's invention was known by any such *name* as "fulled rawhide," or "fulled rawhide leather." In addition to Mr. Royer's testimony we have called other witnesses to show that no such name was used. Mr. Ott, who has been a tanner for forty-five years, says that until Royer's fulled rawhide came on the market he never knew of any article that was made from animal hides to be known as "fulled leather," "fulled rawhides," or by any name in which the word "fulled" was a part." That there was no

such name, of which the word "fulled" was a part, known to the tanning trade, prior to the time that Mr. Royer applied the term to his rawhides. (Page 130.) Mr. Ott also testifies that Mr. Royer's was the first article of that kind, still being rawhide and possessing immense tensile strength, that he ever saw. (Page 130.)

Mr. Hellwig, who is an extensive manufacturer of buckskins, etc., also testifies that prior to the time that Mr. Royer gave the name to his fulled rawhide, he never knew any article, made of animal hides, however treated, to be called by the term "fulled leather," or "fulled rawhide," or "fulled hide," or by any other name of which the word "fulled" was a part. (Page 127.)

Mr. James Patterson, as a mechanic, has been in the habit of using belting and lacing since 1848, and assisted in introducing Royer's fulled rawhide when it first came out. He also testifies that, prior to the time that Mr. Royer gave the name of fulled rawhide to his lacing and belting, he had never seen (known) any article of commerce made of hides to be called "fulled rawhide," or by any name of which the adjective "fulled" constituted a part. He also testifies that it was a new article with a new name. (Page 146.)

N. W. Spaulding, a partner of James Patterson, and who has been using belts and lacings for forty years, says that prior to the time that Mr. Royer showed him his fulled rawhide, he, Spaulding, had never known any article on the market which was named or called "fulled rawhide," or "fulled leather," or by any designation of which the word "fulled" was a part.

Mr. Spaulding also says of the qualities of the new article of Mr. Royer that it was stronger, and more pliable than anything of the kind he had ever used before or since; it is the strongest lacing and strongest belting he had any knowledge of. (Pages 141 and 142.)

The other witnesses mentioned, Hellwig and Patterson, also testify to the superior quality of the new article. (Pages 127 and 146.)

For the sake of fixing more clearly in the mind of the Court the nature and character of the invention covered by this patent, we will more particularly specify what is imperatively requisite in the production of *Royer's* "fulled rawhide," and point out how the *article differs from other articles*, and how Royer's *treatment differs and must differ from other former treatments* in order to result in producing the *new article* with its *new character*. What we state in this respect is sustained by the testimony in the record.

The first and one of the *indispensable* new features of Royer's treatment is the mechanical bending and doubling of the hide *while it is so nearly dry that by this bending operation the fibers of the hide become loosened.* If the hide is saturated, or to use the defendant Coupe's expression, "water soft," no amount of bending, doubling or twisting of the hide will have the necessary effect. Hides *that are saturated with oil or water, or liquid of any kind, when treated mechanically cannot be manufactured into the new article* called "fulled rawhide." It is true that the hides when made thoroughly dry are moistened very slightly before being treated in Royer's machine. But this small degree of moisture is not sufficient to saturate them, or make them "water soft." It merely removes the extreme stiffness, so that they are capable of being bent without cracking. *They must not be so moist but that the bending operation will loosen the texture of the fibers* and leave the hide *mechanically soft when it is dry.* This *dry* condition of the hide while it is undergoing the mechanical treatment in the machine *is an absolute prerequisite to success.* Without this mechanical action upon the hide *while the hide is in this dry condition* success is impossible, and the new article cannot be made. We desire to impress this strongly upon the mind

of the Court at the commencement of our argument, *as it is one of the vital steps of Royer's treatment. No treatment which does not include this mechanical bending of the hide while the hide is in a condition so dry that the fibers will be mechanically loosened from each other can be an infringement of the patent.* We disclaim every treatment which does not include this mechanical bending of the dry hide. If the hide is so dry that when it is bent back and forth the fibers loosen from each other mechanically then the step is included in Royer's process. If the hide is not so dry that the fibers will be loosened from each other when the hide is bent back and forth so as so leave the hide soft when perfectly dry, then the treatment of the hide, whatever it may be, does not include this one vital necessary step of Royer's treatment, and no infringement of his patent occurs. Not only is it necessary that the hides should be dry, but it is also necessary that the mechanical treatment should be very vigorous and severe, and it must also be continued for a great length of time. Not only must the coil of hides be tightly compressed by the bars of the crib of the fulling machine, but some kind of end pressure must be brought to bear upon the coil of hides while being worked in the machine. The compression and doubling of the hides in the machine is so intense

that a high degree of heat is developed *by this mechanical action alone*, and care has to be exercised or the hides are liable to be spoiled by burning. This severe mechanical action must be kept up many hours before the hides are sufficiently softened.

These things appear in the record on pages 13, 14, 16, 17, questions 206 to 209, and answers on pages 37, 148 and pages 160 and 161. (See also evidence of Mr. Coupe, pages 10 and 11, beginning at question 12.) We hope to have succeeded at the outset in making this one important feature of the case understood by the Court. If we have, the case is very much simplified.

The other indispensable feature of Royer's process is the stuffing of the hide while it is being mechanically treated in its dry or nearly dry condition, with a compound such as is mentioned in the patent, or the equivalent of it. The compound *must contain tar, or some other equivalent of tar, which will produce the effect of preserving the hide against decay, and protecting it from the attacks of rats and vermin.*

The entire substance of the new treatment of Royer consists simply in the mechanical bending of the hide, dry, or so nearly dry, that the entire texture of the hide will become soft, by having the fibers loosened from each other mechanically,

and stuffing a compound of grease and tar in the hide during such mechanical treatment.

Simple as is the statement of this treatment, its accomplishment was neither simple nor easy, as is shown in the testimony. A great difficulty was encountered in the production of a machine that would furnish the requisite mechanical action to the hide to be treated; some parts of the hide would be three times as thick and strong as other parts of the same hide. Yet a machine and treatment was required that would reduce *all parts of the hide alike* to a soft condition, *by mechanical action.* This machine was produced by the two Royer brothers, and is referred to in the patent as "a machine constructed for this purpose, and "patented by me, May 12, 1868, under Patent "No. 77,920." We have already mentioned that it was before this Court in the case of *Royer* vs. *Shultz Belting Co.*, 135 U. S., 319. In that case the decision of this Court was in favor of Royer, and it reversed the judgment of the Circuit Court that tried the cause.

We will here call attention to the fact that there are now in common use *two kinds of fulling machines* for fulling leather. One of these is the new *dry* fulling machine which is used for making fulled rawhide. This machine was new with Royer and his brother, and is covered by the

patent of 1868, which is referred to in the present patent upon which this suit is based. This is a *dry* fulling machine, or in other words, it is a machine for fulling the hides while in a condition as nearly dry as they can be worked.

The other fulling machine is used for fulling the hides in a *wet* condition. This *wet* fulling machine is *very old*, and very efficient for the purposes for which it is intended. It is still in use for manufacturing buckskin, chamois, glove leather, etc. Its use has not been affected by the introduction of the dry fulling machine. Although both are called "fulling machines" in the evidence in this case, still they are very different machines. They are so different in their operations that one will not do the work of the other. By this we mean that *one will not do the same kind of work that the other will do.* The wet fulling machine will not work a dry hide *and loosen its fibers mechanically*, while the dry fulling machine will *not work wet hides* to any advantage. They are never used for working wet hides, not being calculated, or efficient for that kind of work. We refer to this because there is so much evidence in the record concerning the fulling stocks and fulling wheels for treating saturated hides. Probably appellee's counsel will not attempt to use this evidence on this appeal, as they did not use it in arguing the

case in the lower Court. Still, we wish to be sure that the two kinds of fulling machines will not be confounded with each other, and hence call attention to their distinctions.

Infringement.

The facts constituting the infringement is shown in the deposition and statement of Mr. Coupe (Record, pages 8 to 13), as well as in other testimony. The defendants unhair their hides by liming, and then drench or "bate" the lime entirely out of the hide. Then they either dry the hide nine-tenths dry before they put it in the fulling mill, or they let it get thoroughly dry and then moisten it. The hide is then "prepared rawhide." They then put a stuffing compound on to the hides and put them in their fulling mill. The stuffing is composed of one hundred pounds of tallow, fifteen pounds of tar, ten pounds of rosin and eight pounds of beeswax. (See Record, near bottom of page 12.) The defendant's fulling mill is a dry fulling mill and operates the same as Royer's. It is described in the defendants' patent, "Exhibit Coupe Patent, 202,414." Record, page 218. The defendants' fulling machine is horizontal instead of being perpendicular. Its end disks, or "false heads D," are forced against the ends of the coil of hides, which it is treating, by "right and left-hand screw-bolts E," and "spiral springs g," in-

stead of by a weight. It has its revolving circular shaft with a circle of bars which form a crib; and it winds and rewinds the hides around the revoling central shaft, while the coil of hides is kept under great pressure, and it operates in all respects just as does the Royer machine. The defendants' hides are treated to the same mechanical operations as are Royer's; they are so treated while they are unhaired and in the same dry, hard condition as are Royer's; they are stuffed with a compound which contains tar and which produces the same effect and is substantially the same kind of stuffing as is Royer's. The stuffing is worked into the hides while being treated in the fulling machine in a nearly dry condition, substantially the same as is Royer's, and the result of the treatment is the production of an article that is the same as Royer's "fulled rawhide." Although defendants put their stuffing on to the hides cold, and before the hides are put into the machine, the effect is the same as when the stuffing is put on warm and after the hides have been somewhat softened in the machine. The heating effects of the mechanical action of the machine upon the hides, which is amply proven, would soon warm the defendants' cold stuffing, and so long as the stuffing was spread on the surface of the hides, it would work into

them so soon as they were softened enough to receive it.

The testimony given by the defendant William Coupe, upon the question of infringement, when called by the plaintiff, as well as other testimony given by him when called as a witness in his own behalf, is explained in the depositions of the complainant. On page 18 of the Record, complainant says: "An immense business is now "done in the East by several parties who are "manufacturing and selling the new article of "fulled rawhide. They all use machines similar "to my machines and processes similar to my pro- "cesses. *They are all following in my footsteps,* "and are not only supplying the East with fulled "rawhide, but they have been shipping it to San "Francisco and selling it in competition with me "*since* 1875. *Prior to* 1875 *I never saw or heard* "*of a single piece of the article* NOW *known as* "*fulled rawhide being upon the market, except that* "*of my own manufacture.* Now I believe that "the value of this article of fulled rawhide that is "manufactured in the East exceeds $4,000 per "day."

He then states that he has examined the defendants' patent No. 202,414, dated April 16, 1878, and understands it. He compares the machine described in the defendants' patent with

his own patented machines. and shows that they are made up of the same elements, perform the same operations and produce the same results; the only difference between them being in some of the minor details of construction. But these differences in construction, he testifies, do not make any difference in their operation or method of operation or in the effects which they produce. He states that "*both machines put the hides through* " *exactly the same motions, and under the same kind* " *and amount of pressure, and both alike reduce the* " *hides to a soft, pliable condition. There is nothing* " *that one of the machines will do with the hides* " *that the other machine will not also do; and do it* " *in exactly the same way.*"

In the efforts of Mr. Coupe and his expert witnesses to make it appear that Mr. Royer's patent should receive a narrow construction considerable testimony was taken. Most of such testimony was given by Mr. Coupe himself. In his evidence he attempted to show that fulled rawhide had been manufactured long prior to Royer's invention, and there are single expressions to be found in his testimony which would look as though he meant to testify that the fulled rawhide which he was testifying about was the same article as the fulled rawhide of Royer. It was, however, developed that Mr. Coupe only intended to testify that satu-

rated hides, which had been treated in the old wet fulling wheels and fulling stocks, were fulled rawhide, although those hides were put into such fulling wheels and stocks in a wet saturated condition, and were chemically treated, and made into buckskins, glove leather, army leather, etc., etc., etc. He and McKelvey testify as to hides that were made into army leather at Davis & Co. by tanning the outside of the hides and leaving a raw streak in the middle of them and then softening the raw streak by mechanical action. That the leather made at Davis' "contained no tanning of any name or nature. It was a pure rawhide, softened by mechanical action, and cured by fulling grease into it." (Record, pages 46 and 47.)

It finally developed that in the treatment in this and other instances the hides were not dry fulled, no tar was used in the treatment, and the hides were treated to chemicals, and when finished were not rawhide but chemically cured leather of some one of the soft kinds before mentioned. There is so much of this indefinite uncertain testimony given by Mr. Coupe that we feel compelled to notice it in this brief on account of the great importance of the case to the appellant. The defendants doubtless put such testimony into the case with the intention of making some use of it. By the time the testimony was closed, how-

ever, the fact appeared so plainly that none of the hides referred to in such testimony had been treated in whole or in part as described in the patent sued on, and that none of them were made into anything like Royer's fulled rawhide; that when the defendants came to make up their brief in the court below they made no use whatever of the testimony so taken. If we knew that they would pursue the same course here we might make this brief much shorter, without endangering our client's interests.

Much testimony is put in by the defendants ostensibly to show the state of the art, but which has no earthly relevancy to the case, unless it be to show how radical was the nature of Royer's discovery and invention. For instance, the defendants put in evidence ancient patents granted to C. H. Brand, John Rose, A. Taw, Moses W. Page, Thomas McDonald, and Joshua Merrill. See these patents in the record, pages 231 to 238. These patents show different stuffings for leather. There is nothing in either of them that tends in the slightest degree to either anticipate or qualify, or modify the discovery and invention of Royer.

Defendants also introduced the oral testimony of the witnesses, David McKelvey, Lemuel Higbee, W. F. Wiley, Samuel A. Johnson, John O'Shea, and George J. Winchester. The testi-

mony of these witnesses is in the record, from page 89 to page 100.

McKelvey was called to corroborate the testimony of Mr. Coupe as to the hides that were treated at Davis & Co's. Higbee, Johnson, O'Shea and Winchester merely testify to a former stuffing that contained tar that was used for stuffing leather, or greasing boots. Nothing that any of them says has any application to any issue in the case.

The other witnesses on the part of the defendants are Mr. Coupe, and two so-called "experts," Joseph A. Miller and Walton C. Tiffany. We shall refer to these "experts" hereafter.

Mr. Coupe's individual testimony comprises over one-third of all the oral testimony taken in the case. His evidence is so uncertain and parts of it are so well calculated to deceive until they are compared with other parts, that we feel compelled to discuss it at length. It is true that none of it goes to prove any anticipation of the patent. No anticipation is set up in the answer, and no evidence was offered to show any anticipation. Mr. Coupe's whole effort was to narrow the claim of the patent, and his evidence is put in with that object in view. A *subsequent* patent to John A. Schultz, bearing date in 1877, was also put in evidence. This patent was irrelevant, and tended

to prove nothing unless it was that John A. Schultz was also an infringer.

Although Mr. Coupe did not commence to use the new process, or make the new article of fulled rawhide until about 1876, several years after Royer's patent was granted and his new article was on the Eastern market, still Mr. Coupe attempts to show that he learned nothing from Royer, but was himself the original inventor of the entire matter. He, with considerable boldness, charges Royer with being ignorant, and etc., etc. These reckless statements, and the reckless manner of stating them, is what has filled up so much of the Record and created the necessity for expending a large amount of labor, both by counsel and the Court, which might have been avoided if Mr. Coupe had been clear in his statements, and had not given things wrong names and descriptions.

Mr. Royer goes through the several steps of the defendants' treatment, as testified to by Mr. Coupe, and shows that they are the same in all substantial particulars. On page 20 he states that the process of unhairing the hides by liming, and then after the hair is removed, subjecting them to a drench for the purpose of removing the lime and other foreign matter, is a process that has long been familiar to tanners. He also states that when the hides were thoroughly

drenched and the lime and foreign matter thoroughly removed from the hides and the hides were dried, they were then in precisely the same condition as the hides would be if they had been unhaired by the sweating process as described in the patent. That so far as the unhairing and drying of the hides go, the sweating process described in the patent and the liming and drenching process described in Mr. Coupe's deposition, have been well-known equivalents of each other for more than twenty years last past. Here we called attention to Mr. Coupe's answer to interrogatory 66, page 54 of the record, in which he states that in the defendants' process *all traces of lime and other deleterious substances are removed.* About the middle of page 54 he states that the defendants' hides are *subjected to "a drench for the purpose of working all traces of lime* and other foreign substance, which *if left in, would injure the production of a perfect product.*" In his first deposition, on page 8 of the record, Mr. Coupe states that after the hair is removed by the process of liming, the hide is subjected to a suitable 'drench,' as it is called, for the purpose of removing the lime and other foreign matter." The hides are afterwards dried. This makes it obvious that Royer is correct when he says, in substance, that when the defendants' hides are

unhaired by liming and then drenched until the traces of liming are removed, and the hides are then dried; they are then practically the same "prepared rawhide" as they would be if they had been unhaired by the sweating process alone and then dried. Continuing further, on pages 20 and 21, Mr. Royer shows that the stuffing used by the defendants is substantially the same stuffing as that called for by his patent, and that the treatment of the hides by the defendants is in fact the same treatment which his patent calls for. He shows that the tar, tallow and rosin used in the defendants' stuffing produces precisely the same effect upon the hides in the defendants' treatment as that stated in the patent.

The defendant Coupe has taken out a process patent, No. 182,106, dated September 12th, 1876, for an improvement in processes for the manufacture of rawhide. This patent is put in evidence, record, page 224. Mr. Royer states that he has examined the specifications of that patent, and that the process therein described *is not followed* by the defendants. The defendants' process patent calls for a "sour," consisting of diluted sulphuric acid. The patent also calls for a "slush," consisting of tallow, paraffine and beeswax. *The defendants do not use either the sour or the slush.* Instead of using the slush, called for in the

defendants' patent, they leave out the paraffine and substitute complainant's element of tar, and, thereby, use the *complainant's stuffing instead of the defendants.*' The defendants' *patent* treats the hide in an air-tight drum, heated with hot air, and having projecting pins inside for mechanically softening the hides. Instead of using the air-tight drum, 12 feet in diameter and 4 feet wide, with internal projecting pins, as described in Mr. Coupe's patented process, the defendants use a dry fulling machine substantially like the complainant's, as already described. The defendants' process patent calls for a current of warm air forced into the drums, therein mentioned and which the patent says "is a *vital point* in producing a good article of stock." This, although declared to be *a vital point* in Mr. Coupe's patent, the defendants do not use. Mr. Coupe states, in his testimony, that the drench which they use *is a secret.* Mr. Royer, with keen intelligence, points out that *if this is so it cannot be the drench which is described in the defendants' process patent*, because the patent itself makes *that drench public.* In fact, as Mr. Royer states, in substance on page 21 of the record, nothing that is described or claimed in Mr. Coupe's patent *as new* is used by the defendants in their process.

Long after this deposition of Mr. Royer was

given, the defendant, William Coupe, was called by the defendants as a witness, and made a deposition in their behalf. That deposition is in the records, from pages 41 to 89; and we respectfully submit to the Court that in that deposition he has not stated any facts, which tend either to weaken the strength of the complainant's patent, or clear the defendants from the charge of infringement. On the contrary, although the testimony is colored and intended doubtless to favor defendants' case, all that was possible under the existing facts; and although it contains statements charging the complainant with ignorance (which statements are wantonly insulting to the complainant and entirely uncalled for; and reflect back in anything but a favorable light upon the good faith of the witness); it still contains a sufficient statement of historical and existing facts to strengthen the complainant's position, both as to the originality and radical nature of his invention, and as to the defendants' infringement of his patent.

Mr. Coupe, in the beginning of his deposition, shows that he had a long experience as a tanner and leather manufacturer. That he has manufactured shoe leather, and also the various kinds of what he terms "factory leather," which he says consists of lace leather, both tanned, tawed and

rawhide; also "picker leather," tanned, tawed and rawhide; and also various kinds of belt leather, both rawhide, partially tanned and dead-tanned; also apron leather, and also a style of leather which he says is made of a perfectly green rawhide, which is produced and cured without the aid of any tanning materials, grease, or anything of that nature. In 1864 he went to Europe and learned everything he could there in regard to lacings and beltings (see record, pages 41, *et seq*). His experience includes not only what was manufactured prior to Royer's patent, but also that which the defendants have since manufactured, and which the complainant asserts has been done in infringement of his patent.

Since, with all this knowledge and experience, Mr. Coupe has not been able either to furnish any proof which shows any anticipation of Mr. Royer's invention, and has not been able to show any material variation between the defendants' treatment of rawhides and the treatment covered by the defendants' patent, we may very safely conclude that Royer was the first and original inventor of the treatment, and that the defendants are willful infringers of the patent which covers it.

On page 45 of the record, Mr. Coupe says that there are three separate and distinct methods of

converting hides into leather for commercial use. The first is the ordinary tanning method. The second is the method of tanning by the use of minerals or chemicals. The third is by fulling in various kinds of grease, and curing the hides in that way. On page 47 he states that it was nothing new in 1863 (the year that the army *leather* was made at Davis'), to convert hide into *leather* without the use of any tanning whatever, but simply by mechanical action and fulling grease into it. That it was substantially the same as the method employed for making glove-leather and the like. That to the best of his knowledge, that method was used and well known long prior to 1863, both for the manufacture of glove-leather and *leather* for other purposes. That it was one of the three ancient underlying principles of converting hides into *leather*—the method of working grease into hides by mechanical action.

On page 50, Mr. Coupe states that the effect of tallow and oil fulled into the hide is to soften it.

On page 169, Mr. Coupe says that he cannot remember when he commenced treating hides in the *hard, horny condition in which they are left when only one tenth moist;* and when asked who besides himself had treated hides in that hard condition prior to 1873, admits that he *did not know of any one* absolutely. As it *was others be-*

sides himself that treated the hides at Davis & Co.'s, in 1863, this is direct testimony proving *that those hides were not treated in the hard condition that would bring the treatment within the complainant's patent.* Taking the testimony altogether, it is evident that the treatment of the hides at Davis' (hereinafter discussed), was but a variation of the so-called "oil tanning," in which the hides were saturated with water, and were kept soft either with water, or with the oil stuffing that was worked into them as the water evaporated out of them in the fulling machine; and that *in no instance of which the evidence treats prior to the application of complainant for his patent, was there a hide softened mechanically by being worked in that hard and horny condition called for by the patent,* and which is necessary in order that the fibers shall be mechanically loosened from each other, *and without which there is neither an anticipation or infringement* of Royer's patent.

In putting in this testimony, Mr. Coupe repeatedly states, in effect, that in the old style method of fulling oil and grease into the hides, *the hides were softened by mechanical action.* In this statement he is entirely wrong, and this is shown in the closing part of his testimony, as well as in other parts of it. (See answers to interrogatories 10, 11, 12, 13 and 28, on pages 44, 45 and 47.)

After the testimony had so far progressed that the fact was developed that the former hides about which he testified went into *wet* fulling mills, and in a saturated condition, and that Mr. Coupe had never known *dry* hides to be milled prior to 1873 (see page 169), and just at the close of Mr. Coupe's last deposition, we asked him whether a raw hide that was put into a fulling mill thoroughly saturated with water was not then just as soft as it was afterwards when it came out of the machine with the water expelled from the hide and its place taken in the hide by the oil? His answer is—page 171—

"A.—As far as the matter of softness is con-
" cerned, it is softer going into the mill, thoroughly
" saturated with water, than it is after it comes out
" of the mill with the grease in it, but it is *not so*
" *dry when it goes in as it is when it comes out*, the
" heat generated by the fulling operation having *ex-*
" *pelled the water*, and at the same time *allowed the*
" *grease to go in* and unite with the fibre and
" gelatine.

"Int. 60. Then is it not a mistake to say in
" such cases that the mechanical action of the
" fulling mill in expelling the water from the hide
" and working the grease into the hide softens the
" hide?

"A.—It would be, *considering it as regards a*

" '*water soft.*' *There is a difference between a* " '*water soft*' *and a* '*fulled soft.*' HIDES THAT " ARE SOFTENED BY WATER, IF LEFT TO DRY OUT, " WILL BECOME HARD AGAIN; hides that are soft- " ened by fulling, and at the same time that the " fulling is going on have the water expelled and " the grease impregnated into them, will not be- " come hard, but retain for an indefinite time their " softness. The mere matter of hides containing " a larger or smaller quantity of water at the time " of going to the fulling mill is simply a question " of time as regards the quantity of water that " needs to be expelled by the action of the fulling " mill and generation of the heat before the true " operation of the fulling and working in the " grease commences. If the hides are put into " the fulling mill wringing wet, it takes them long- " er to get to the real true merits of a fulling " operation than it does when they are properly " tempered."

The foregoing quotation from Mr. Coupe's testimony furnishes us the foundation upon which he has ventured to swear that the hides were *softened in the fulling mills*, when in fact they were *put into the mills softer* from being saturated, *than they were when they came out* of the mills finished. When the hides went into the mills *saturated with water* they were softer than they were when they

came out of the mills *saturated with the oil and grease*, because water is softer than oil. But Mr. Coupe says in the foregoing quotation, that "There is a difference between a 'water soft' and a 'fulled soft;" that the greater or less amount of water that is in the hide when it is put in the mill "is simply a question of time as regards the quantity of *water that needs to be expelled* by the action of the fulling mill and generation of the heat *before the true operation of fulling and working in the grease commences.*" This idea that "the true operation of fulling and working in the grease" does *not commence until after the water is expelled* is an invention (as Mr. Royer would say) of Mr. Coupe. If the fulling did *not commence* until *after* the water was expelled from the hide, the hide would doubtless then *be hard when "the true operation of fulling" commenced*, because it is well established, and Mr. Coupe himself swears, that when the wet hide simply dries it becomes very hard. If the water was worked out of the hides "before the true operation of fulling commenced," of course the hide was then hard, and the witness would have been correct in testifying that the fulling mill softened the hide as it worked the oil and grease into it.

But we do not admit that the "true operation of fulling and working in the grease" commenced

after the water was expelled, and we charge that this statement, and all of the apparent deductions developed in the defendants' testimony, that seem to rest upon this idea, are all "inventions" which are put in bad faith, and are not believed for a moment by the defendants themselves. By the "apparent deductions" mentioned, we refer to the pretense that, in the ancient fulling mill operations the hides were softened *by mechanical action*, and that buckskin, army leather, glove leather, chamois, etc., were fulled rawhide.

As to the hides that were put into the old wet fulling mills wet, ever being softened by mechanical action, we refer the Court to the following testimony.

On pages 160 and 161 Mr. Royer testifies that, in order to produce his article of fulled rawhide, and to soften a hide by mechanical action alone, the hide must be so dry that the fulling will loosen the fibers from each other. That this cannot be done when the hides are saturated, as they are then soft from the saturation, and *in such condition the fibers will not be loosened* from each other by any amount of mechanical action. That when the hides were put into the mill saturated, it was the grease, and not the mechanical action, that made them soft.

Exhibit E, E, and F, F, illustrate the difference

between a hide that has been softened by the loosening of the fibers on account of milling it in a dry, or nearly dry condition, and a hide that has been thoroughly treated by mechanical action in the ordinary manner in a fulling machine. That it has long been a well known fact, that oil or grease will soften a hide, and will keep a hide soft that is saturated with it.

Royer also testifies that a dry, unhaired, hard rawhide will readily absorb *water*, but it *will not absorb oil, or grease or tar*. Even though the oil, or grease, or tar was to be left upon the hide for a hundred years, *it would not absorb any of it*. That for this reason it has long been a common practice of working oil and grease, etc., into the hides by first saturating them with water, which they readily absorb, and then putting the oil, etc., on to the hide, and as the water evaporates from the hide, the oil, etc., will be drawn into the hide as the water leaves it, by capillary attraction. In such case, *the hide does not become dry at all*, but the oil, etc., is drawn into it as the water leaves it.

See Record, pages 39 to 40, 148, 162.

It is evident that Mr. Coupe well understood all these things when he was giving his testimony, and knew perfectly well that none of the hides

were softened by mechanical action in the old style wet fulling machines as he testified. In his testimony he *directly corroborates Mr. Royer* in these statements. On pages 166 and 167 he shows that he has put all of the oils and also tar and paraffine on to the unhaired hard raw hide and left them there for an indefinite lengths of time, "perhaps *for over two years, and never knew them to penetrate beneath the surface.*" That the method of working oil, grease, etc., into hides by first saturating the hide and then putting the wet hides into a fulling mill with oil or other stuffing on them, then operating the mill by which means the water was evaporated from the hide, and as the water was evaporated from the hide the oil or other stuffing entered the hide and took the place of the water in it, was "an ancient and well-known method of converting hides into leather."

As we have already pointed out, Mr. Coupe has for many years last past been working the hides so nearly dry that the *mechanical action* is to soften the hides by *separating and loosening the fibers from each other.* His hides are in the same condition as to moisture as are Royer's and he of course must have understood that feature of hide manipulation. On page 169 Mr. Coupe fails to remember when he first commenced to treat hides in this hard condition, but admits that he *never knew any*

one else do it prior to 1873. *He nowhere pretends to assert that he himself did it prior to that time.* Further evidence of this is found in the facts, that Coupe's patents were not applied for until very much later. His earliest patent that is put in evidence—No. 182,106, was not applied for until July 11th, 1876. This was his *process* patent, and *he does not use the procees described in the patent,* but other improvements instead. On page 8 of the record he says that he did not bring his present "rawhide lace leather" to perfection till 1879. He says he uses a machine as described in patent No. 202,414 (Record, page 10), and this patent was not applied for until March 22d, 1878.

In the specifications of this last patent he calls the machine "an improved machine for boarding or *breaking rawhides.*" The defendants use the machine described in this patent. (Record, page 10.) The patent describes the operation of the machine in winding and re-winding the hides around the central shaft under pressure just as in the Royer machine, and describes the effect as that of "boarding or *breaking rawhides.*" On page 10 he says that the effect of the operation upon the hide in this patented machine is the same as an ordinary currier's board would have on a piece of leather. It softens and *breaks down the fiber.* On page 12, referring to the reversing device, he says

that it was put in operation about the same time we introduced the "breaker; that is about the year 1878."

He thus distinguishes this machine from *all wet fulling machines* by calling it a machine for *boarding and breaking rawhides.* He calls it a "*breaker*" because its effects is to soften *and break down the fiber* of the rawhides treated in it, and *those rawhides are nine-tenths dry* when treated in the machine. As "facts speak louder than words," there is no room to believe that Mr. Coupe, when giving his testimony, did not understand perfectly well the difference between the *dry* fulling operation, which is necessary in order to bring the treatment within the complainant's patent and the ordinary *wet* fulling, so long used, that is entirely outside of the patented treatment.

We will here notice a piece of testimony which is put in by the defendants as of especial importance. We understand that it is put in as showing a former treatment which came as near as, if not nearer than, anything else proved, to being an anticipation of the complainant's invention. Mr. Coupe testifies that, at the factory of James Davis & Co., at Pawtucket, in Rhode Island, about the year 1863, and subsequently, there was manufactured an article of leather that was made by stuffing tallow and oil into rawhide, by

working them in a fulling machine without the use of any chemicals or tanning whatever. Mr. Coupe testifies that:

"It was a pure rawhide, softened by mechanical action, and cured by fulling grease into it."

See pages 47, 48 and 77.

Mr. Coupe states on page 47 that in 1863 it was nothing new to convert hide into leather without the use of any tanning whatever, but simply by mechanical action and by fulling grease into it.

On page 59 the witness states that the stuffing used at James Davis & Co's was usually composed of tallow, fish oil, or in other words (straits oil, or cod oil), and rosin. That sometimes they used different kinds of fish oil, and sometimes neats foot oil. That one reason for changing the oil was, "because *some kinds of oil are better adapted to certain tannages of leather*," etc.

On page 81 Mr. Coupe was asked with regard to the degree of moisture of the hides fulled at Davis', but could not remember. He says:

"As regards the degree of moisture contained in the hides fulled at Davis', as spoken of heretofore, *I don't just exactly remember.*"

So important did the defense consider the evidence with regard to these rawhides treated at James Davis & Co's that they called the witness, David McKelvey, to corroborate the evidence of

Mr. Coupe. McKelvey's evidence is in the record, from pages 89 to 93. McKelvey testifies to the manufacture of the ordinary tawed leather with salt and alum at James Davis & Co's, and also states on pages 91 and 92, etc., that they also made at James Davis & Co's, leather that was left entirely raw or untanned, "which was not subjected in any way to the action of tanning materials, either bark tanning or chemical." (Record, page 91.)

The leather was manufactured at Davis' in 1862 or 1863. He states that this leather was "limed, drenched, fulled, stuffed and finished." That the rawhide leather was fulled and stuffed in a fulling machine. Also, that the rawhide was *partially* dried before it was submitted to the fulling and stuffing operation. That it was used for army leather, for making belts for the soldiers. Also, that the method of preparing leather from hides by fulling them by mechanical action and working grease into them was an old process, known to him for 27 years.

All of this must have been put in evidence for the purpose of making it appear that the process described in Royer's patent was not new. It could have had no other bearing or object, so far as we are able to judge.

Could it have been an accident that *the extent* to

which the hides at Davis' were saturated when put in the fulling machine was not made known, and yet the statement put in that they were "partially dried?" Was there a desire to make it appear to the Court that those hides were practically dry fulled so as to make it appear that they might have been treated somewhat according to our patent? "Partially dried" might be "nine-tenths dry," or it might not. We prove that the hide is still wet through and through, and is still water soft when it is "half dry." Record, page 124. This evidence regarding the hides at Davis & Co. is insufficient in any view of it to constitute any anticipation of the complainant's patent. It well illustrates the necessity of the rule which requires an anticipation to be *fully proved* and not left in doubt; since other testimony given by Mr. Coupe himself shows that those hides at Davis' were not dry fulled, nor were they stuffed with any non-oxidizable stuffing of the character of that called for by the patent. They were merely heavy hides tanned by the ordinary oil tanning process, and finished for army belts.

For the purpose of discovering whether these hides treated at James Davis & Co's, as stated by Mr. Coupe and Mr. McKelvey, were fulled in a mill that would soften the hides by separating the fibers mechanically while the hides were in a dry

or nearly dry condition, we again called Mr. Coupe to the witness stand. In his testimony at page 166 of the record we endeavored to obtain from him statements which would determine this vital question. He there states that the hides were "*tempered*" by being hardened to a greater *or less extent*, That in thus tempering the hides the hides were simply hung up to dry, so as to *get rid of a certain quantity of the water*. That the hide must be brought to a certain consistency as to moisture before the successful operation of fulling can begin, as no heat can be generated where there is an excess of water. On page 167 he states that it has long been a well known method of manufacturers of factory leather, to first *soak the hide* with water. then *let the surplus water drip off* of the hide, then put *such wet hide* into a fulling mill with oil or stuffing on it, then operate the fulling mill, by which means the *water would be evaporated from the hide* and the stuffing would enter the hide *as the water left it*, and so take the place of the water in the hide. *That this was the method that was used by Davis & Co. in the manufacture of the army leather* made by them about 1863, mentioned in Coupe's former evidence, and in McKelvey's evidence.

So that it turns out, after all, that the army leather manufactured at James Davis & Co's in

1863, upon which the defendants placed so much importance, was not treated by a process at all similar to Royer's treatment. On the contrary, the hides, after they were prepared by unhairing and drying hard, were *saturated with water*. Then, after allowing the *surplus water only to drip off* of them, they were put *in a wet, water-soft condition*, in the ordinary well-known fulling-stocks or mill, which is adapted to and used for treating hides *only when they are in a wet condition*, saturated either with water, oil or grease of some kind. The hides at Davis & Co's were also stuffed without doubt with the ordinary oils used for such purposes and mentioned by Mr. Coupe on page 59 of the record. The same, referred to by McKelvey, on pages 92 and 93, used for manufacturing buckskin, glove leather, chamois leather, etc.; and by Mr. Royer, on page 152. In the said army leather manufactured at Davis & Co's the oils produced without doubt their usual chemical, oxidizing effects, and produced an article of the general character of glove leather, buckskin, etc. It must have been of that general nature to have been fit for soldiers' belts. The fulled rawhide of Royer and of the defendants is unfit for soldiers' belts, by reason of the stuffing which it contains. This stuffing does not oxidize or produce any chemical effect. It must, therefore, be left in the

hide forever. In the treatment of buckskin, chamois, glove-leather, etc., a strong chemical effect was produced, and had to be produced, in order to obtain the required article. Although the defendants have endeavored to make it appear in their testimony that the buckskins, army leather, glove leather, chamois, etc., were pure rawhide when finished, the evidence shows that this was not the case. The treatment of these kinds of leather is described at more or less length by several witnesses. All this testimony, including that of Mr. Coupe, shows that *these leathers were oxidized through and through.*

Christian Hellwig's deposition is in the record from pages 124 to 128. He is the proprietor of a tannery that manufactures buckskins and that class of leathers to a very great extent. His tannery turns out about five hundred buckskins per day, and he has long been well acquainted with the use of fulling-stocks, fulling-wheels, stuffing-wheels, and the processes and treatments followed in the manufacture of the classes of tawed leathers mentioned, including army leather. He gives a short description of the processes on page 124. The unhaired hides, only half dry, are put with fish-oil on them, in the fulling mill, and worked until the oil is soaked into the skin. This is repeated five or six times, and until "*the water is*

evaporated and replaced by the fish oil." "Then the skins are let lay in the oil, *in order to give the oil time to oxidize,* say about from *one to two months.*"

From this it is seen that the oxidizing operation is a very important part of the treatment, the hides are actually kept in the oils (and only oxidizable oils are used) *from one to two months.* The hides were put into the fulling stocks *wet through and water-soft,* although called, in that condition, "half dry," (page 124).

Jacob William Fennell is a tanner with experience in all kinds of leather, and buckskin in particular. Record pages 131 to 135. He says, the hides are put into the fulling mill *wringing wet,* and the oil is worked into them. In five or six days they are taken out and aired, then put back again until they are full. After that they are *left lying in a loft for any length of time from a week to nine or ten months.* Sometimes they are piled in stacks in the loft, and watched, and *when they get too warm* they are pulled apart and spread out. *After all of this* the oil is worked out. The *hides are not manipulated mechanically in a dry condition by any bending or pounding operation at any step in the entire process of manufacture.* (Page 133.) *The are never so dry that bending will separate the fibers mechanically.* They are always so wet that

they will easily bend and double, on account of the moisture in them. These statements apply to all the various kinds of glove leather manufactured. On page 196, Walton C. Tiffany, one of the defendants' experts, states that, "it *is a well-known* fact among the leathermakers, *that the process of oxidation as employed in the manufacture of glove leather*, is for the purpose of producing greater tensile strength and more enduring qualities in the leather." "It is also known to me *that the chemical process involved will accomplish* this purpose." On page 200, this same witness explains that the oil-tanned leathers, such as glove leather, is taken out of the fulling stocks and partly dried several times *in order that the oil or stuffing, which is not absorbed in a chemical way, may become by exposure to the atmosphere as much as possible oxidized*. On page 201, he further states that "*the oxidation of the oils* is the result of the peculiar conditions to which the oil is treated. *If oils of that oxidizable nature*," *etc.* This witness also shows that there *is a chemical combination of the oils with oil-tanned hides other than oxidation*. (Pages 200 and 201.)

On pages 155 and 156, Mr. Royer states that chamois leather, glove leather, army leather, etc., have long been made by stuffing fish-oil into them and fulling them *in a wet condition in fulling stocks*.

That they are taken out after a while, dried some, again stuffed with fish-oil, and again fulled, and this process is many times repeated, "until the hides are fairly filled with fish-oil." *It must be oxidizing rapidly drying oil.*" He further says, that "*it takes a chemical process to make this glove leather.*" That "*this chemical process*, which is nothing but combustion without light and with but a low degree of heat, *is known by the term of oxidation.*" The evolved heat and the evolving gases emanate *at the expense of the fish-oil and of the hide substance.* "It is agreed by professional men that a part of the fish-oil *is irremovably chemically incorporated into the hide*," *etc.*

On page 156 Mr. Royer shows that in oiled tanned hides, such as glove leather, etc., after the hides have been filled with oil they are thrown in a pile where they heat; that the heating is so rapid that the piles have to be thrown down and rebuilt several times. On page 152 he further states, that "*only drying oils, rapidly drying oils,* "*will heat, such as fish oil and linseed oil,* in the "process of absorbing oxygen, called oxidation. "*The fats from cattle, tallow and oil, do not dry,* "*or not rapidly enough to accumulate heat.*"

On pages 176, 182, to 184, C. Tennant Lee, a chemist, called by the complainant, testifies, that oils used for treating the chamois and other

leathers that have been made for many years, by the fulling in of grease, are *easily oxidizable oils*. He says, "If we were tawing a loose-fibered skin by fatty matter only, recourse would of course be had to the use of an oil which is *easily oxidizable* on fulling into the skin." That Mr. Coupe understood that the oils used on oil-tanned skins, such as the army leather made at Davis & Co.'s, buckskin, glove leather, etc., produced a chemical effect, is evident from his own individual testimony. On pages 59 and 86 he names the various kinds of stuffing that were used, and they are mainly made up of the fish oils which are the drying oxidizable oils. On page 86 he states that while rats would eat a limed hide that was stuffed with tallow alone, they would not eat the hide if any of the "common oils," such as are ordinarily used in the production of stuffing compounds, was used with the tallow. He then names the oils to which he refers. They are "cod oil, straits, bank, menhaden, or any of the *ordinary fish oils* that are commonly made." It seems incredible that Mr. Coupe must not have known that the reason why the rats refused to eat the skins after these oxidizable fish oils were added to the tallow was because of the fact that the *chemical action of the oils changed the rawhide into leather*, and that the whole substance of tallow, hide and oil was *so*

changed by chemical action that there was no nutriment left which even the stomach of a hungry rat could extract nourishment from. On page 167 he says in this connection: "As the heat is generated the water is expelled, the grease enters, *the chemical change takes place*, and the rawhide is *converted into leather*." On page 59 Mr. Coupe says in reference to the stuffing used at Davis': "Sometimes they used to use different kinds *of fish oil*, but the *oils were substantially the same*. I would add, also, that occasionally neatsfoot oil was used.. The reason of the change in the oil from one kind to another *is because some kinds of oils are better adapted to certain tannages of leather*," *etc.* To this testimony of Mr. Coupe must be added his long experience in the manufacture of oil-tanned leathers, and the further fact, which is of such common knowledge that the Court will take judicial notice of it, viz: that buckskin, chamois skins, glove leather, etc., *are not rawhide, but are chemically changed* by the treatment to which they have been subjected, so that *there is no appearance of rawhide left in them.*

On page 196 the defendants' chemist, Tiffany, shows that this chemical change, by oxidation, occurred in making glove leather, etc.

When all these facts are put together, it is impossible that Mr. Coupe could have believed him-

self, when he testified that the *oil-tanned* skins were still *raw hide*. He knew that some oils had a different effect from that produced by other kinds of oil, or as he says, "some kinds of oil are better adapted to certain *tannages of leather*," etc. How could he so testify unless he knew that the oil *did tan the leather*, and unless he also knew the effects that the different oils produced *in the tanning*, and since those effects were *chemical changes* that were apparent to a school boy how could he have helped knowing it.

But there is another character of evidence even more convincing, showing the bad faith of the witness, in testifying that the oil-tanned leathers mentioned were fulled rawhide.

It is well established, as we point out in other places in this brief, that Royer was the first one that ever used a fulling machine in which the hides were fulled while in a practically dry condition. Royer was the first to invent a practicable fulling machine, in which the hides were wound and re-wound upon a central shaft, and compressed within a crib, and with an endwise pressure upon the coil of hides. As we have also pointed out in other places, the old style of fulling machine is shown by the evidence to be incapable of working a dry hide, but the hides were always treated in them in a saturated, soft condition. The fulling

machines were not of the nature or character of Royer and Coupe's present fulling machines, in either their construction or operation. The *dry hide* fulling machines, as we have elsewhere shown, will not have any effect in the treatment of *wet hides*, nor will the old *wet hide fulling machines have* any effect in the treatment of the *dry hides*.

Yet, on page 73 of the record, Mr. Coupe, in referring to the *new dry fulling operation now used by Royer and Coupe*, says that *it* "was an *old and well-known operation*," long prior to the invention of Royer. In this he must have known that he was telling what was not so. The fulling operation carried on *with the dry hides*, which Royer and the defendants carry on, was not invented or known until Royer invented it. On pages 49 and 50 Mr. Coupe states that when he learned that chemicals injured the hides, and that the less chemicals he used the stronger the leather was, it taught him the necessity of providing some *mechanical means* that would *entirely soften* the hide *in its raw state*, "because I realized that it would give me a better product *to soften the leather in that way*," etc. That he did not then give up the use of chemicals, "for the reason that I *had not the mechanical means to soften the hide*." The mechanical means he had at that time for softening the leather, he says, were "the hand pin-block

and hand board." He then describes the several machines he tried for softening the hides *by mechanical action*, but could not succeed with any of them until he made his boarding and breaking machine. This machine was the last one that he got up. He was still trying with the pin-block in the year 1874 (pages 76, 77 and 88.) On pages 76 and 77 he says he began to make the "raw hide leather" for the market about the year 1874. That he softened it under an "ordinary pin-block," and made but very little of it for the reason that he "*had no facilities for softening* in an entirely satisfactory manner." "It was very expensive stuff to make with the crude facilities that we had *for fulling*."

Putting all this testimony of Mr. Coupe together—and it is evident that he understood all the while the difference between the oil-tanned leathers and the "pure fulled rawhide" that was softened by mechanical action, and understood perfectly well that the pure rawhide never had been, and could not be, softened mechanically by the old fulling machines. If he did not know this, why did he work so many long years in getting up machines that would full the hides dry? Why did he, in testing and trying to get up a *dry hide* fulling machine, not at least try the well-known *wet* fulling machine? He tells us of the

hand board and pin-blocks, and drum with internal pins and fluted roller machines that he tried to convert into dry hide fulling machines, all of which, however, refused to be converted under his teachings, but he does not tell us that he was silly enough to try to convert the wet hide fulling machine into a dry hide machine. At the same time he shows that he *did not succeed in getting any machine* that would do the *dry hide softening* until after the year 1874, which *was long after Royer's invention*, and nearly two years after he applied for his patent. It was probably much later than 1874 when Mr. Coupe got up his first machine that would full hard rawhide. This appears from other testimony. On page 12 Mr. Coupe says they put the reversing device in operation "*about the time we introduced the breaker; that is, about the year* 1878," etc. It is only his dry fulling machine that he has in any place called his "breaker." Although on page 88 he can't fix the time when he got up his first boarding and breaking machine, but thinks, if his memory served him right, it must have been about the year 1874; his other testimony shows it was much later. His earliest patent on his boarding and breaking machine, No. 199,415, was not applied for until November 12, 1877. His patents for the improvements on the machine, viz.: Nos.

202,414 and 241,308, were applied for March 22d, 1878, and March 31st, 1881, respectively. He used no tar in his stuffing until the latter part of 1876 (page 83, near bottom). He *did not use tar until after he saw it in the fulled rawhides of Royer* at Anton Heim's, in New York, in 1875 (pages 75, 76, 79, 84 and 85). The machine which he used in 1874 was only the impracticable power pin block, which proved a failure (page 79). As he had no practical machine in 1874, and did not use tar until "*long after*" he saw Royer's fulled rawhide with tar in it, in New York, he evidently had no genuine fulled rawhide leather in 1874.

His circular, containing so many testimonials, is in the record and the earliest date of any of the testimonials is Sept. 13th, 1878. If Mr. Coupe believed, what he now swears to, that the machines at Davis' softened the hides *by mechanical action*, why did he not try to use that kind of a machine while he was struggling so long, and with so many failures, to get a machine that would do that kind of work? On page 45 he says that he means by "fulling" the subjecting of the hide to some kind of *mechanical* action for the purpose of softening and working in the grease, and says that these fulling and stuffing operations can be carried on in either the old pin blocks, the ordinary pounding machines, wheels and drums with pins in them,

ordinary fulling stocks, and machines for boarding and breaking. If he believed this why did he not try the "ordinary fulling stocks." Why is it that when he comes to name the means at his command for softening the hides *by mechanical action*, when he wished to manufacture Royer's article of pure rawhide, that he *does not name* the "ordinary fulling stocks?" He certainly must have had them, because he was all the while manufacturing a class of goods that were treated in the ordinary fulling stocks. On page 138 Mr. Mullen testifies that Mr. Coupe had the fulling stocks and used them for fulling wet hides, but never used them for dry hides.

On pages 48 and 49, he tells us that when he began business for himself in 1865, he made tawed leather similar to that made at Davis', in the treatment of which the hides were subjected to the stuffing and fulling process, and that he had *continued to manufacture by that method* from 1865 *up to the present time.* He must therefore have had the *wet* fulling machines constantly on hand. *Yet he could not name them as any part of the facilities for softening the hard rawhides, which is requisite* under the Royer treatment. On page 169 we tried to have Mr. Coupe tell when he first commenced treating hides in the hard condition in which they are left when they are one-tenth

moist, but on account of temporary nervousness he could not fix the date. When the date of 1873 was then fixed at random in our question 39, and he was asked who besides himself he had known, prior to 1873, to mill hides in the dry and horny condition in which they were left when only one-tenth moist, he answered: "I don't know anyone absolutely." We think we have pointed out enough from Mr. Coupe's individual testimony to show that he does not believe himself when he says that buckskin, or any of the oil-tanned leathers, or the army leather made at Davis', was "pure rawhide *softened by mechanical* action, and cured by fulling grease into it." (Pages 47 and 77.)

For the kinds of work that the ordinary fulling stocks are adapted for, viz: the fulling of *wet, saturated* hides, they are entirely successful; are still in general use the same as they always have been, and no improvements have been needed or made upon them. We here repeat what the evidence shows, viz: that the wet fulling mills will not full the dry, hard hides, nor will the dry fulling mills full the wet or "half dry" hides. The fact that the same name, "fulling," is applied to both, does not make or tend to make them identical or of the same character so long as they will not do the same kind of work.

Machine Co. vs. *Murphy*, 97 U. S., p. 120.
American D. R. B. Co. vs. *Sheldon*, 4 Banning & Arden, p. 557.

We call attention to the fact that McKelvey does not state in his testimony that the hides, at Davis', were *softened by mechanical action.* He says the effect of the salt and alum *bath* was to tan and soften the hide, "and made it so that we could work the grease into it in order to *keep it soft*" (page 90). The hides for the army leather, instead of being saturated in the salt and alum bath, were *drenched* and only "partially dried" before going into the fulling machine (pages 91 and 93.

In asserting here, as we do, that Royer invented the *dry* fulling operation of raw hides, we are fully conscious that the patent was granted to the two Royers in 1868 for the machine which does the dry fulling. We are also conscious that the present patent does not claim the machine that does this dry fulling, nor in fact does it claim the dry fulling operation *per se*, separate and distinct from its being a necessary and essential part and portion of the entire treatment which, as a whole, is covered by the patent. We are also well aware of the rule of law which holds that what is described in a patent

and is not claimed therein, is, so far as that particular patent is concerned, admitted to be old. If therefore there was no testimony on the subject, other than the patents themselves, it would stand as an admitted fact that the operation of dry fulling by itself was old and well known. The evidence however shows to the contrary. It is already pointed out herein how long it took Mr. Royer to make the operation of dry fulling practicable. Although the machine for doing it was patented in 1868, and is mentioned in the present patent sued upon as a proper machine with which to do the dry fulling provided for in the present patent, it is still a fact that the practical operation of dry fulling was not yet accomplished in 1868. While we call the fulling "*dry* fulling" we do so in a comparative sense only. It is dry fulling *as compared with the former fulling operations*, which were "half dry." Two of the greatest difficulties that had to be overcome, after the machine of 1868 had been invented, was the destruction of the hide, when it was fulled entirely dry; and its refusal to become softened if it was fulled when it was too moist. These difficulties still existed after the machine of 1868 was invented.

After that machine was invented Royer still had to find out whether there was a degree of

moisture which could be applied to the hides, at which the fibers would be loosened so that the hide would remain soft, after it was thoroughly dry, and which degree of moisture would be sufficient to prevent the destruction of the hide when it was first subjected to the fulling operation. He finally learned that there was such a degree of moisture to which the natural obstinacy of the hide must yield. Then there came the trouble of moistening the hide equally throughout all its different degrees of thickness to this necessary degree of equal moisture. Then it still required practice to learn the proper amount of pressure to be applied to the hides in the crib of the machine; to learn how to operate the machine to avoid the burning of the hides in some places, and to overcome the raw spots in other places. All these things, and more, were discovered and learned by Mr. Royer after the machine of 1868 was patented. The making of these fulled rawhides is to-day a trade that has to be learned by a person before he can practice it. If the most skillful buckskin tanner in the world, who had never worked these dry fulling machines, should step into defendants' factory and ask leave to run one of their boarding and breaking machines until he learned how to operate it, they would either refuse the request, or they would expect to see many hides spoiled be-

fore the new operator would succeed in making a single hide into good rawhide leather. It is a trade that has to be learned like any other trade, or any other species of tanning. Royer had to learn the trade as he invented it. He had no patterns to aid him; no examples to follow; no superintendent to give him instructions. He searched books on leather treatment, but they were silent. He visited tanneries, but none of them softened hides by separating the fibers mechanically. He talked with the tanning fraternity, but they pronounced his plan impossible of accomplishment. He had to follow experiment after experiment, trial after trial, failure after failure, until he finally found that the machine of 1868 could be operated successfully, and until he learned how to so operate it. It is because of these facts that we assert that Royer did invent the process of dry fulling, even after the machine of 1868 was invented.

It is true that it was well known, probably for generations, that hard, dry, unhaired rawhide could be made soft by mechanical action alone. It was done by bending or pounding the hide, which thereby became softened in spots. Places in the hide were softened, but no method of softening the hide equally, all the way through and through, had been discovered. All efforts made in that

direction prior to Royer's time failed, and the tanning fraternity had thereby come to the belief that it could not be accomplished. It is this process of softening the hide *equally through and through* by mechanical action that we mean to assert is an invention of Mr. Royer, and not the mere softening in spots, which had always been known. The softening in spots could be done with a hide entirely dry. The bending of it began gently and gradually. It was not worked in a machine that began with a sharp doubling bend, applied under great power and pressure. The hide was not therefore, destroyed at the beginning by the powerful action; but at the same time the hide was not softened all through, but only in spots, for want of an application of just such sharp doubling and bending under a resistless pressure and power that would hold every part of the hide in an unyielding embrace, and bend and double the thickest and strongest parts of the hide and compel the loosening of its fibers all through, with the same effect that attended the bending of the hide at its thinnest parts. This is what we mean by the "dry fulling," which we say Royer accomplished the first time that it ever was accomplished. The sharp bending of the hide, under power and pressure, was necessary in order to equally soften it all through. To accomplish this sharp bending

under power and pressure, without destroying the hide by breaking and rupturing it, a degree of moisture had to be discovered that would permit the bending without rupture, and at the same time not destroy the mechanical effect of loosening the fibers from each other all through the hide texture. This, we assert, was a new dry fulling operation of which Royer was the first and original author.

We only make the assertion, however, because it is a fact which is shown by the testimony in the case, and because we believe that it is right and best that the actual facts should be clung fast to in trying our suit. We have an abiding faith that if we are right we are more certain of success if we adhere strictly to the truth. If we are wrong, of course we ought not to win, and we need not regret that we lost our cause if we ought to lose it. As the dry fulling operation is not claimed as a step by itself, in our patent, we of course cannot now claim it by itself, or in any other way than as one of the vital steps in the entire treatment of the prepared rawhide which our patent does cover. The fact therefore, as to whether Royer invented the dry fulling operation or not, is not important, except as it assists in throwing light upon the testimony given by the defense, and especially the individual testimony of Mr. Coupe.

If Mr. Royer did invent the operation of dry fulling, or if he was the first one that reduced it to practice, then of course the testimony of Mr. Coupe to the effect that the same kind of fulling was old and well known, and had been practiced at Davis' and by tanners generally, becomes worse than valueless for his side of the case. It is enough for us, however, to show that Royer was the *first to introduce the operation of dry fulling into a practical treatment* of the hides. So long as the state of the art shows this fact, no other facts could make our case any stronger under the claim of our patent. Or, if Mr. Royer was the first to combine the dry fulling operation which softened the hides mechanically, with a stuffing which contained tar or its equivalent, by means of which the mechanically softened hide was preserved in its soft, pliable condition long enough to make it a valuable article of commerce, then we have made our case practically as strong as it possibly could be made under the claim of our patent. *In either case we show a radical foundation patent, and one entitled to the broadest construction of its claim that can be given.*

We repeat that during all this time when Mr. Coupe says that he could not treat the hides raw for want of mechanical means to soften the hide, the ordinary fulling mill was in common use and

if that was a means of softening and fulling oil into raw hides as he would have the Court believe in other parts of his testimony, then he did have good and adequate mechanical means to soften the raw hides without having to invent something new. The fulling machine was a machine that did its work well and to the full satisfaction of those desiring to do the kind of work that it was capable of doing. It is still in common use and is doing in hundreds of places the same kind of work that it always did. The testimony of Mr. Coupe, to which we are now referring, amply corroborates the testimony of Royer and his witnesses, when they say that the old ordinary fulling mills could not and did not soften dry hides. Christian Hellwig, who has been in the business of manufacturing buckskins, chamois, glove leather, etc., for twenty years, and now has one hundred thousand dollars invested in the business and who constantly uses the ordinary fulling mills, says that no beneficial effects could be produced upon a dry hide such as Royer treats, in one of those fulling mills. He says that the hides were always put into the fulling stock *half dry*, and *when half dry they were so wet that they were soft, and would double easily on account of the moisture that was in them.* (Record, pages 124 and 125).

On page 50 Mr. Coupe further explains the

large number of machines that he made for softening the hide in its raw state before he succeeded in getting one that he could use for doing that kind of work. He designed and tried a power pin block. What the difference was between the *power* pin block and the old *hand* pin block which he speaks of on page 49 does not appear. The power pin block, however, failed to give satisfaction, and he then made a machine with double fluted rollers. The double flutted rollers also failing to give satisfaction, he next tried a trip hammer. Trip hammers are very old and very effective machines. They strike home and hit hard. Probably a trip hammer had never been known to fail in doing effective work before. Most any ordinary mortal would give up, discouraged and broken-hearted, when he found himself tied to a contract for softening hides that he could not fulfill with a trip hammer. An implement that was omnipotent in shaping and welding iron and steel, that could laugh at the ineffectual resistance of the dense and strong and hard metals, which it manipulated as an easy pastime task, failed when under the exclusive control of Mr. Coupe to soften rawhide. Did the trip hammer lack power, or was the intellect that controlled it pursuing a worthless impracticable method in applying blows to the softening of rawhides when he should have

been applying the doubling back and forth of the hide as Royer was already doing and as Coupe is now doing.

On page 52, as well as on other pages, Mr. Coupe asserts that Mr. Royer was ignorant, and on account of his ignorance he had so much trouble in working his hides and have them equally softened all through. Yet long after Royer had succeeded in producing a perfect machine, and a perfect treatment, and a perfect product, Mr. Coupe was making failures with power pin blocks, with double-fluted rollers, with trip hammers, and with drums constructed with internal projecting pins. When Mr. Coupe, after trying so many other devices that failed, took all the knowledge that he had gained by his long experience in business, by his reading of tanning authors, by his researches and travels in England, and combined this vast store of knowledge, and that which he had gained from his many recent *failures*, with his whole mind endowed, as his evidence shows it was, with brilliant faculties of conception and powers of invention—when he took all this wealth of intelligence and harnessed it to the resistless action of a powerful trip hammer and drove the mighty combination with the added energy of a steam engine upon the unhaired, naked rawhide without effect—it would seem as though the end had been reached.

What could have been the matter? The trip hammer could not have lacked *for quantity* in either action or power. The evidence of Mr. Coupe in charging ignorance upon Royer, *who had long before succeeded*, and in asserting his (Coupe's) own vast understanding of the business, would indicate that the power and action of the trip hammer could not have failed for want of an intelligent controlling and directing of that action and power. Yet all that was required to accomplish success was power and action, *correctly applied*, directed and controlled. All that Royer did was to apply power and action, under proper control and in a proper direction, to the hides, *and he succeeded*.

The only rational solution of the problem is to conclude that Royer's densest, darkest and blindest ignorance was several years in advance of Coupe's most brilliant intelligence. Royer's ignorance was bliss, as he was already making and selling good, fulled rawhides, while Coupe's wisdom was folly, as he was still spoiling good skins with pin blocks, with fluted rollers, with drums having internal pins, and with trip hammers. After failing with the trip hammer, Mr. Coupe next tried a drum with pins projecting inside of it. This was an old device used by tanners for washing and drenching hides and leather, and for stuffing tawed and tanned leather. (Record, pages 44, 137 and

140.) This drum, it seem, was larger than the ordinary wash-wheel. After testing it and finding the nearly dry hides came out of it just as they went into it, he took the wheel down and threw it out into the yard. (Record, page 137.) When the drum failed, Mr. Coupe tells us that he designed a machine which he called a "boarding and breaking machine." This was the machine that works with the circular crib, the central shaft and end pressure on the coil of hides, and which winds and rewinds the hides just as did Royer's machine. When Mr. Coupe had thus imitated Royer's machine *and adopted Royer's ignorance, he for the first time saw daylight*, so far as the machine was concerned. But although he then had a successful machine, he yet had to discover a new treatment. He invented a treatment and took out his patent for it. This is patent No. 182,106, which was applied for July 11, 1876.

Although, in his testimony, Mr. Coupe and his expert assert that the process is the same whether the same stuffing is used or not, still Mr. Coupe did not seem to think so when he was making efforts to produce a good article of what he called, in his subsequent circulars, "rawhide lace leather," and "rawhide picker leather." (See Record, pages 172 to 174 and 163.) In those circulars, a "process" which enabled him to take the hide in

a green state and "*preserve it so that it will always retain its natural strength and pliability*" seemed a recommendation for the article. *Yet no "process" will effect this preserving, which does not include the stuffing of tar or its equivalent into the hide.* If an alkali solution were used in the "process" instead of the tar, the "process" would defeat instead of creating the preservation of the hides. He *then* thought that there was much importance to be attached to the *kind of stuffing* used. His patent is for an "*improvement in processes* for the manufacture of rawhide." The patent first describes the process of unhairing by liming, and then drenching the hide *to remove all the lime* and other impurities from it, and then *drying the hide nine-tenths dry or entirely dry.* Then the softening is commenced by taking the hides when "nearly dry" and giving them a coat of the stuffing. The ingredients of this stuffing are carefully given in the patent. It consists of "tallow, sixteen parts; paraffine, two and one-half parts; bees-wax, one and one-half part." The patent treats the mechanical action as of the least importance. It says: "After the appli-
" cation of the slush I put the hides through a
" machine for stretching the fiber. After the fiber
" is stretched, as above described, the hide
" becomes somewhat soft." The foregoing is all that there is in the patent that could refer to the

operation of the boarding and breaking machine. It describes a further treatment in a drum with internal pins, *but this the defendants do not use*. The claim of the patent is:

"The *improved process* described, of submitting "the hides or skins from which the hair has been "removed, to a succession of baths composed of "the solution, and in the order set forth, and "when partially dry, *coating them with a mixture* "of tallow, beeswax and paraffine, and then sub- "mitting them to the action of a revolving drum "or other suitable softening apparatus, all sub- "stantially as stated for the purpose described."

To say the least, the stuffing is made quite as prominent a feature of this patent as is the mechanical operation. Not only is this true of the patent, but the defendants have been at great pains to prove that the ingredients used in Mr. Royer's stuffing, including the tar, have been long known and in common use among the tanning fraternity. The several letters patent, before mentioned, put in evidence by the defendants, were all either for stuffing compounds alone, to be used in treating cloth or leather, or else they were for the treatment of leather, in which treatment the compounds were used, viz:

Patent to C. G. Brand in 1848; patent to John Rose in 1856; patent to A. Taw in 1864; patent

to Moses W. Page in 1866; patent to Thomas McDonald in 1866, and patent to Joshua Merrill in 1870. Three of these patents were for the stuffings alone. All the patents must have been put in evidence by the defendants for the *purpose of showing the stuffings alone*, since the treatments to which the stuffings appertained in a part of the patents, applied only to *leather*, none of them relating to rawhides, *or to any treatment in which the leather was softened by mechanical action.*

Now, if it be true that the addition of tar to the stuffing did not change the process in the opinion of the defendants, why have they gone to such trouble to prove by oral and documentary evidence that the use of tar on leather was old? *They have not attempted to prove that the use of tar on rawhide was not new with Royer.* On the contrary, Mr. Coupe himself swears that he did not use any tar on rawhides until after he saw Royer's article at Anton Heim's about the year 1875. (Record 76 and 77). Mr. Miller, who is the defendants' witness, shows that tar or a similar stuffing had not been used on *rawhide* prior to complainant's patent. (Record, pages 113 and 116). Although the defendants claim that paraffine and tar are equivalents of each other, yet Mr. Coupe shows that he *did not use paraffine on rawhide until after Royer's patent.* See his

answer to inter. 252, page 88. If therefore paraffine is the equivalent of tar as defendants assert, the use by them of paraffine instead of tar in a treatment of rawhides, otherwise covered by Royer's patent, is an infringement of the patent just the same as the use of tar is. The defendants have not aided their cause by testifying that *paraffine is an equivalent of tar* for the *rawhide* treatment, since the paraffine was not used in such treatment until after Royer had used the tar in the treatment.

It is seen by the different evidence given by the defendants that in some parts they try to defeat the patent by showing that similar stuffings had before been used on tanned leather, boots, etc., and were described in prior patents. In these parts of their testimony they would have the *stuffing* the one important feature of Royer's patent. In other parts of their testimony, however, they change their views and seem to think the *process* is everything, and that the changing of the stuffing does not change the process at all, and the changing of the stuffing, therefore, is unimportant. In still other parts they make the want of a machine, or mechanical means to soften the hides," the only thing that was lacking to make the former treatment of rawhide the same as the present (see pages 49 and 50), while in an-

other place, page 87, Mr. Coupe swears that it is not necessary that any particular kind of machine should be used for fulling; that there are a variety of machines for fulling leather, and the process is not dependent upon any one of them. We think we may safely challenge the production of any other record that can furnish evidence excelling the defendants' testimony shown in this record, for palpable inconsistencies in positions taken; in the statements made in contradictions of natural laws and of well known facts; in attempts to impose upon common sense, and in evident bad faith. In all the contradictory positions mentioned, taken by the defendants, they are wrong. The patent does not cover the process without the stuffing, *as a process;* nor does it claim the stuffing, *as a stuffing*, without the process, nor does it claim the machine. On the contrary, it describes and claims a *treatment* which includes *both the dry fulling process and the stuffing*, and it refers to the proper kind of a machine (and the only kind of a machine which has yet succeeded), for doing the dry fulling.

The testimony of Mr. Coupe is very uncertain on account of his constant misapplication of terms. He constantly uses the same words to mean different things, and does so apparently for the express purpose of deceit in making his testimony appear

to state facts which did not exist, and at the same time being sufficiently careful in his use of terms to avoid a charge of false swearing. Take as an example the testimony just cited, and the evidence to which it refers. In the evidence cited Mr. Coupe declares that, in his answer to inter. 237, he did not intend to convey any such idea as that he had used *paraffine* in a compound for stuffing pure rawhide as early as 1866. Referring to the answers to inter. 237 and 238, and we find that he says, "at that time and long prior to that, even as "early as 1866, I had been using a stuffing com- "pound composed of various ingredients used in "the manufacture of leather, some of which were "tallow, *paraffine* oil and rosin. This stuffing "compound gave very good satisfaction. I used "it very extensively on the various kinds of lace "leather; also used it for a considerable time, *in* "*fact worked through many thousands of pure* "*rawhide leather, with no other stuffing compound.*"

"Int. 238.—You say that you used the paraf- "fine stuffing on the various kinds of lace leather "manufactured by you. Do you mean to include "the tanned and the partly tanned leather as well "as the pure rawhide?

"Ans.—*I mean to include all kinds of lace leather;* "that which was tanned with chemicals; that

" which was partly tanned or tawed; *and the pure* " *rawhide.*"

Remembering that Mr. Coupe calls the article made under Royer's patent "*leather*" (Record, pages 42 and 43), and we ask how it is possible to read the answers of the witness to interrogatories 237 and 238, and other evidence on pages 84 and 85 of the record, without understanding and, in fact, knowing that he was swearing that he did use paraffine in a compound for stuffing pure rawhide as early as 1866. The language contained in the answers certainly says so; yet, in answer to inter. 252, the witness almost indignantly declares that " It *was not my intention to convey any such idea*, and I think the reading of that answer does not convey any such idea."

We cite the foregoing as a sample of the double meaning in which so much of Mr. Coupe's testimony is to be received. It is certainly impossible to read his answer to interrogatory 237 without understanding that he intended to state that he had used a stuffing for rawhide, of which paraffine was an element, as early as 1866. But in answer to interrogatory 252, Mr. Coupe says, not only that it was not his intention to convey any such idea, but he thinks that the reading of that answer does not convey any such idea.

Another sample is found on page 170 where

Mr. Coupe was asked what kinds of glove leather he referred to that he considered to be fulled *rawhide.* His answer was: "Ordinary glove leather, similar to the glove I have in my hand." On the same page, however, in answer to interrogatory 51, which says: "Is that glove greasy, or *does it contain any stuffing like your fulled rawhide?*"

His answer was: "Whatever stuffing it does contain has united with the fibre and gelatine of the hide, *and formed that insoluble substance called leather.*"

From this answer it is seen that Mr. Coupe knew perfectly well that the glove he held in his hand was made of a material which *has been changed from rawhide into leather.* That it had been so changed because a *stuffing had been used that had united with the fiber and gelatine of the hide* so as to change the hide into an *insoluble leather.*

This evidence in this place also shows conclusively the fact that the glove *leather* which he had all the while *been referring to as fulled rawhide* and which he says *was similar to the glove which he had in his hand,* was in fact a *chemically tanned insoluble leather,* and was *not rawhide either in fact or in name.*

Mr. Royer states the truth on page 147 of the

record, when, in referring to Mr. Coupe's deposition, he says:

"In trying to read understandingly, I was "troubled with a confounding of terms that pro- "duced a confusion of ideas. I also met with "statements that *are contradictory to universal* "*natural law, and contradictory to his own state-* "*ments.*"

And here we will refer the Court to the deposition of Mr. Royer in the record, from pages 147 to 162, for a clear, intelligent, comprehensive, sound, candid and sensible exposition of the whole subject, including an unravelling of the mysterious uncertainties that exist in Mr. Coupe's testimony. When this deposition of Mr. Royer is read and compared with Mr. Coupe's testimony, there are few persons seeking information upon the subject who would not much rather be commended to the "ignorance" which Mr. Coupe charges Mr. Royer with possessing, than to all the information that can be obtained from Mr. Coupe's long experience and knowledge otherwise obtained. Royer's first deposition is in the record from page 13 to 41.

The defendants seem to claim that all that the patent covers is an improvement for unhairing the hides by sweating, so as to entirely avoid all use of chemicals.

Of course there is nothing in the patent or in the evidence to justify any such position. The patent is *for an entire treatment.* The object of the treatment is to obtain an article of manufactured rawhide that shall retain the natural strength of the rawhide, without possessing the detrimental properties of natural hardness and liability to decay which rawhide naturally possesses. To accomplish this result Mr. Royer worked many years and finally succeeded, by means of the treatment as an entirety, described in his patent. *Up to the point of unhairing and drying the hides, there is nothing new in the treatment.* The unhairing he prefers to do by the sweating process, but that is not stated to be anything new. Up to the point of unhairing and drying the hides there was no new feature of novelty or new treatment involved. The new treatment commences with the hard, unhaired, dry rawhide. The new treatment is simply fulling the rawhide while it is nearly dry and stuffing it as it is being worked with a compond containing tar and grease. *This compound is non-oxidizable in its nature. It has no such chemical action upon the fibers of the hide as had the fish oils and other stuffings which had been formerly used in the manufacture of buckskins, glove leather, etc.* The article produced by Royer is different from any other in that the

fibers of the hides are mechanically loosened from each other, and the hide is thereby made soft *and its great natural strength still preserved*, while in the case of buckskin, glove leather, etc., the fibers of the hides are softened by the chemical oxidization of the oxidizable oils used, and the hides are chemically changed and *lose in their treatment that great natural strength of the hide which is preserved by Royer's treatment.*

When the defendants assert that the process is not changed by the putting of tar into the stuffing, they doubtless refer to the mechanical operation of running the hides through the machine. This mere mechanical action is not a process within the meaning of the patent law.

Corning vs. *Burden*, 15 How., pp. 267–268.

Walker on Patents, Sections 3 to 16.

MacKay vs. *Jackman*, 12 Fed. Rep., 615.

Hatch vs. *Moffitt*, 15 *Ibid*, 252.

Gage vs. *Kellogg*, 23 *Ibid*, 894.

Dryfoos vs. *Wiese*, 19 *Ibid*, 315.

The bending and doubling operation to which the hide is subjected is a part of the treatment. Working the stuffing in the hide during such doubling operation is also a part of the treatment. A TREATMENT, *where one stuffing produces one effect*

upon the hide and another stuffing produces another effect upon the hide, are ESSENTIALLY DIFFERENT. If it were a fact that buckskins had been manufactured, or could be manufactured, by fulling them in a dry fulling machine, and stuffing them with *oxidizable oils* as they were being worked in the machine, the *treatment would not be the same* as it would be if a *non-oxidizable* stuffing was applied in the same way. A different article of leather would be produced thereby, and it would be a different treatment. Royer's patent calls for a "TREATMENT," and not a technical process.

Still even this question is scarcely pertinent to the issues of this case, since the evidence shows that Royer was the *first man that ever succeeded in stuffing dry rawhides in a dry fulling machine with any kind of stuffing whatever.* The machine patent of May 12, 1868, did not do it.

We have already pointed out the evidence showing that dry rawhide *will not absorb* grease or oil of any kind. It does not appear from the evidence that any person prior to Royer ever succeeded in fulling *any kind of a stuffing into a dry rawhide in a dry fulling machine.* As a *process,* therefore, of stuffing a dry hide in a dry fulling machine with any kind of oil or grease, it was *entirely new* with Royer. From this the Court will see why the defendants deemed it necessary

to confound the fulling of wet hides in a wet fulling machine with the fulling of dry hides in a dry fulling machine. *Unless the defendants could obliterate that difference they gained nothing by obliterating the difference between fish and other oxidizable oils and the non-oxidizable stuffing* used by Royer and by the defendants.

So much alike, however, is the defendants' treatment and that covered by the patent that the defendants cannot find such a distinction between the two which occurs after the hides are once unhaired, as they are willing to rest their case upon. In both instances, after the hides are once unhaired and dried they are put through the same motions and operations in the same kind of a machine, and stuffed with the same kind of a stuffing. It is the same treatment of the unhaired hides in both cases. Consequently, even with the narrowest kind of a construction for the patent, the defendants are forced to find a distinction, *not in any part of the new treatment, which begins after the unhairing of the hides*, but they must find a distinction in the operation of the unhairing itself, and *then they must have the patent interpreted to be for the unhairing* and not for the *new* treatment itself. For this reason we find a very large amount of Mr. Coupe's evidence and ingenuity, as well as that also of his experts, expended in com-

menting upon the differences between unhairing hides by sweating and unhairing hides by liming. We will not waste time in following all the details of this testimony that exist in the record. On page 72, in comparing his liming process with Royer's sweating, Mr. Coupe says:

"The differences in the two processes, or meth-
" ods, consist as follows:

" By the Royer process, sweating is used for the
" removal of hair; in the defendants' process the
" hair is removed by the method of liming, which
" has a different action upon the hide from that of
" sweating, wherein the method of sweating leaves
" all the fatty matter in the hides, which can-
" not be removed by subsequent operations, which
" is needful for a good product. Neither does the
" sweating, owing to its being a rotting or decom-
" posing method, dissolve the albumen at the root
" of the hair. *These are vital differences in the*
" *two methods.*"

Near the bottom of page 112 of the record, Mr. Miller, who is one of the defendants' experts, says in comparing the defendants' treatment with that of the patent sued on:

"Comparing the whole of the two processes
" with each other, the broad, distinguishing fea-
" ture between the two consists in that the defend-
" ant, defendants' process depends upon the action

" of lime in the *preparation* of the hide, whilst the " Royer process lays particular stress upon avoid- " ing the use of lime, acid or alkali, in the *prepar-* " *ation* of the hide."

The foregoing quotations are samples showing the efforts that are made by the defendants *to make it appear* that the unhairing is the one important step in the treatment covered by the patent. We deny, of course, that the mere unhairing of the hide is the one important step covered by the patent, and deny that there is anything new or novel about such unhairing.

Since the *general method* of unhairing those oil-tanned leathers *was by liming*, and since those made at Davis' in 1863 were unhaired *by liming*, where is there any reason in Mr. Coupe presenting the Davis' leather as an anticipation of Royer's fulled rawhide and then trying to convince the Court that no good fulled rawhide could be made of hides unhaired by liming until he discovered how to lime in 1874 or 1875, some ten or eleven years later. Royer was making a first class article of his fulled rawhide more than two years prior to 1874, and if before that time a good article of the kind could not be made by the liming methods *then known*, what becomes of all the testimony about the Davis' army leather, and all the other

oil-tanned leather, made by the *liming* method prior to Royer's invention.

We think all this testimony is the merest jargon; preposterous; absurd; ridiculous and contemptible. The oil-tanned leathers were and are good articles of commerce, and useful for what they are designed. But they are not Royer's "fulled rawhide."

There is an abundance of evidence, however, which proves that unhairing by liming and then drenching is substantially the same as the unhairing by sweating. Although Mr. Coupe has so often repeated that a good article of rawhide leather cannot be made from a sweated hide, the whole substantial weight of the testimony is against him. Mr. Coupe testifies as though he was well informed in the method of unhairing hides by sweating, yet he states on page 55 that he has never employed that method except in an experimental way. That, with him, the sweating method was invariably unsatisfactory. That it was a treacherous method, and not adapted to the class of stock the defendants were obliged to use. That the defendants seldom got a perfect hide out of the sweating room, most all coming out more or less damaged, which caused considerable loss. That the dirty, slimy condition in which the method left the hides made it difficult to work in the subse-

quent operations, and left the hide in such a condition that when it became dry hide a sort of hard shelly substance was found on the surface, which made it difficult to moisten and difficult to mill. That the defendants never adopted the sweating method, particularly in the method of this class of leather for the market.

Yet that Mr. Royer has manufactured the fulled rawhide from about 1871 up to the time that he testified, *without ever injuring or losing a single hide, and unhaired all his hides by the sweating process is an indisputable fact*, and it proves that Mr. Coupe is entirely wrong in the objections which he raises to the unhairing of hides by the sweating method.

Mr. Ott had been in Mr. Royer's employ one year when he testified, and he swears that during that year Mr. Royer had unhaired his hides by sweating, the number being about five or six hundred. Mr. Ott testifies that there was no difficulty whatever in unhairing the hides by the sweating process, and that during all that time *there had not been a single hide injured at Mr. Royer's by the sweating process;* and that the sweating process *did not rot the hides.* Mr. Ott, on pages 143, 144, 130 and 131 states that hides unhaired by sweating do not become gummy and sticky; that he had never known it, and if they had become gummy and

sticky he would have known it. He further states that there is no insoluble cement formed in a hide unhaired by sweating, as stated by Mr. Coupe. From the fact that Mr. Royer has all the time unhaired his hides by sweating, and has been for so many years constantly familiar with the sweating process, he, of course, *must know* much more about it than Mr. Coupe can know. He, as well as Mr. Ott, contradicts all that Mr. Coupe says with regard to injuries produced by the sweating process, and shows that there is no truth whatever in those statements. Sweating for the purpose of unhairing is not a rotting process. Mr. Royer calls attention to the fact that most vegetable products, such as hay, grain, raisins, and dry figs, are sweated; and wheat is sweated in sacks or barrels without rotting. We all know that grain put in a pile will go through a sweating operation, and dry out entirely without the slightest injury to it. Neither is there any gum or anything sticky about a sweated hide. On page 150 Mr. Royer states that this gum is an invention of Mr. Coupe's. See Mr. Royer's testimony on pages 149 to 153. On page 153 as well, also, as in the testimony of Mr. Ott, pages 129 to 131, where it is shown that super-liming and the different degrees of liming and the different effects produced by the different degrees of liming, has been long well known to

the tanning fraternity. The only possible excuse that there can be for Mr. Coupe testifying as he has about the difficulties and disadvantages of unhairing by sweating is, that he did not know any better. We know of no excuse, however, for his testifying to the existence of things which he could not and did not know of since, they never did exist.

In the answer to complainant's bill and in Mr. Coupe's testimony, page 74 of the record, it is stated in general terms that the defendants used the process described in Mr. Coupe's process patent, No. 182,106, dated September 12th, 1876. Mr. Coupe testifies that the defendants are the owners of that patent and that they *now use*, and have done since the issue of that patent the method described therein, in the production of their rawhide, lace and picker leather, and "*also the two or three improvements that have been made in the method* are in use." And he further states on the same page that "*we make no departure whatever from the method specified in the patent, further than* WHAT CIRCUMSTANCES REQUIRE."

A comparison of the patent with Mr. Coupe's description of what the defendants actually use *shows that they have thrown away everything claimed as new in the patent and have substituted in lieu thereof* THE THINGS WHICH ARE INCLUDED IN

ROYER'S PATENT. Mr. Coupe shows that they have made *no departure* from the patent *further than what* CIRCUMSTANCES REQUIRE. This patent of Mr. Coupe is for a process for manufacturing this fulled rawhide. It is in the record, pages 224 and 225. The steps in this process patent as covered by its single claim are, first:

Submitting the hides or skins from which the hair has been removed to a succession of baths composed *of the solution* and *in the order set forth.*

Second—When the hides are partially dry, coating them with a mixture of the tallow, beeswax and paraffine.

Third—Submitting them in this condition to the action of a *revolving drum*, or other suitable softening apparatus, all substantially as stated. In this patent, as in Royer's, the *unhairing is not included in the treatment covered by the claim.* Mr. Coupe, however, does include in the claim the several baths, a portion of which are for the *drenching of the hide in order to get the lime out.* The drench in the patent is composed of dried blood, ammonia and water. It is doubtful whether the defendants use this particular drench. The hides remain in the drench *long enough to kill the lime.* They are then removed from the drench and are well worked on both sides and are then placed in a *sour of sulphuric acid and water.*

They are removed from the sour, well washed, and put in a *bath of carbolic acid and water.* The patent states that this prevents all *further decomposition.* In this respect the patent seems to conflict with the idea given by Mr. Coupe in his testimony that the hides *unhaired by liming will not decompose.* It will be noticed by the specifications of the patent that they are *several of these baths* to which the hides are submitted *after the removal of the hair.* These are the bath in the drench, the bath in *sour,* and the subsequent bath in the *carbolic acid* and water. *The last two baths are not however used by the defendants.* The defendants, *however, do drench their hides until all traces of the lime are removed.* The next step described in the patent, after the baths, is the *drying of the hides nine-tenths dry*: or, if not convenient to soften them at that time, may be left to *dry out entirely.* This one feature of the patent the defendants follow, and *imitate Royer in so doing.* They let their hides dry *nine-tenths dry,* or else they let them *dry out entirely.* In the latter case however, they *again moisten them one-tenth dry* a step which is *not described in their patent,* but is described in equivalent language in Royer's patent. The patent next calls for giving the hides a coating of slush of tallow, paraffine and beeswax. Instead of using this

slush, however, the defendants *use another one which contains tar.* This substitution of stuffing, which is substantially *the same as Royer's* for the stuffing or "slush" called for by the defendants' patent, must therefore be one of the "departures" from the patent *which "circumstances* required." After the application of the slush, according to the patent, the hides are put through a machine for stretching the fiber. After that another coating of slush is applied and the hides are put in a *drum which is air tight and provided with tubular shafts.* The drum is about twelve feet in diameter and four feet wide with internal pins. A *current of warm air is forced into the drum* through one of the journals, and passes out through the other, so that the temperature inside of the drum is under the control of the operator. The patent says that this *is a vital point in producing a good article of stock.* The defendants, however, *do not use the drum, nor do they force any current of warm air into contact with the hides at all.* The abandonment therefore of *this vital point* in producing a good article of stock, *and the substitution therefor of Royer's method, was another one of the "departures"* from the patented method *that circumstances required.* In practice, therefore, the defendants have abandoned the submitting of the hides or skins to a succession of baths

composed of the solutions, and in the order set forth in the patent. They have also abandoned coating the hides with a mixture of tallow, beeswax and paraffine, and they have also abandoned the submitting of the hides to the action of a revolving drum. In abandoning all of these things they have *abandoned each and every step that is covered by the claim of their patent.* They have therefore entirely "*"departed" from their patent.* That the patented method of Coupe was worthless, and that the defendants, when they tested and tried it, found it to be worthless, and *that they could not produce an article of fulled rawhide leather by following the method described in the patent,* we all believe. These were the "circumstances;" and they were potent and irresistible "circumstances" that required and compelled the defendants in the manufacture of rawhide leather *to depart entirely from their patent and to follow Royer's.* Considering all these facts, it provokes a smile to hear Mr. Coupe tell the truth in very mild, and very indirect language, when he says:

"We make no departures whatever from the method specified in the patent *further than what* CIRCUMSTANCES REQUIRE."

So far, however, as his evidenee intimates, that the "circumstances" did not both require *and*

compel the defendants to bid their patented process a long, last farewell, and turn their backs upon it, and "depart" from it forever, *or else forever fail to produce a single piece of rawhide leather;* we do not credit it.

The evidence of James Mullen is in the record, from pages 135 to 141. He was in the employ of defendants in this case for about eight years, from July, 1870. On pages 135 and 136 he describes how they manufactured lace leather under the old Page patent. They rolled the hides up when near the finishing, and pounded them under the pounding block for about *two and a half to four minutes.* When put under the pounding block there was no moisture of water in them, but they were saturated with oil and tallow. Probably it is this Page lace leather that Mr. Coupe refers to in his testimony of being softened under the pin block. It is seen at a glance that the softening which could be done in *four minutes'* time under an inefficient pin block is not to be compared in effect with the intense mechanical treatment *for so many hours,* to which the hides are subjected in the defendants' working machine. He thinks the defendants commenced making an article like Royer's fulled rawhide about 1876 or 1877. He states that about the last of 1873 the *defendants had two pieces of Mr. Royer's rawhide there.* The clerk

told them that the two pieces came from San Francisco. He states that Coupe started to manufacture that kind of an article by building a large wooden wheel, about half as big again as a common wash-wheel, with pins inside of it. That he fixed a machine outside of that wheel with steam pipes, and put up a fan to blow air into the wheel; and then put into the wheel the hides that had been limed, unhaired, baled, dried and dampened with water and covered with a stuffing of wood tar, tallow, beeswax and rosin. That the hides were just a little damp and still stiff. That Mr. Coupe put the hides in the wheel and kept them there two or three days, until the hides were pretty well thumped in the wheel; when he took them out; and *they came out of the wheel just the same as they went in.* Mr. Coupe then *took the wheel down, threw it out in the yard, and made his boarding and breaking machine.* (This boarding and breaking machine is a machine similar to the Royers' machine under their patent of May 12, 1868.) He also testifies that the article then made by Mr. Coupe was *just the same as Mr. Royer's fulled rawhide.* (Page 138.) That *until the defendants got the machine mentioned, they never made that kind of lace leather;* and that the difference between the lace leather they then made and that they had formerly made was, that *one was tanned and*

the other was not. He also testifies that Mr. Coupe had in his factory fulling stocks, a fulling mill and wheels used for washing (pages 138 and 140.)

As before stated, there are two vital points which must be observed in the practice of the Royer treatment. First—The hides must be nearly *dry* and hard. Second—They must be *subjected to a long and severe mechanical treatment.* When Mr. Coupe was asked questions which, if correctly answered would have stated facts instead of conclusions bearing upon these vital points, his memory failed. He had no hesitation in stating as his conclusion of fact, that his former pin blocks did soften the hides mechanically; but when questioned as to how long he worked the hides under the pin blocks, it was impossible for him to tell, *it was so long ago.* He could not tell whether it was more or less than an hour. (Page 169.) Mr. Mullen, however, remembers well enough that it was *only about four minutes.* Not only this, but they were not put under the pin block until after they had gone through the main treatment and *were already saturated with oil and tallow.* (Page 136.)

Again, when Mr. Coupe was asked the degree of moisture that was contained in the hides treated at Davis', his memory at once failed, althongh he remembered that the hides treated under the pin blocks were nearly dry. (Page 81.) In this

place he conceals the fact that the hides treated under the pin block were *already nearly finished* when they went under the pin block; and that *this was the reason* why they were nearly dry.

Again, when he was asked at what time he commenced to treat the hides in the hard condition in which they are left when they are one-tenth moist, he could not remember. He was too nervous to even attempt to fix the time. (Page 169.) On page 12, before the question of dates had developed any importance in the testimony, he fixed the time at which he introduced his present breaking machine at about the year 1878. When, later in the case, it apparently was an object to make it appear that the machine was already in existence before he saw the Royer fulled rawhide, at Anton Heim's, in New York, in 1875 (pages 75 and 76), he could not fix the date, but stated that *if* his memory served him right, it must have been about the year 1874. Yet on page 79, he states that it was the power pin block that he used in 1874, and on page 78 he admits that prior to 1874 the only rawhide leather which he had seen was that which he had seen at Davis' except some that was part tanned and part raw in 1853.

These changes and failures in the recollection

of the witness cannot but affect the weight of his testimony, whatever may be the causes of them.

From the testimony cited and much other that is in the record of the same general character we claim that it is shown:

1st.—That the "circumstances" which controlled the action of the defendants were their determination to manufacture an article similar in character to Royer's fulled rawhide, and one that would compete with it in the market. That they had found his fulled rawhide on the market, coming in competition with their leather products. They had examined it, and found that it was stronger and better than anything they had to place on the market against it, and they must therefore imitate it or it would draw a portion of their trade away from them.

The necessity of imitating this new article of fulled rawhide was one of the controlling "circumstances" that "required" the defendants to "depart" from their patent, as was also the still existing necessity of imitating the fulled rawhide; and the further fact that this could not be done by following the patent of Coupe further than to thoroughly drench the hides for the purpose, as Mr. Coupe testifies, "of removing all the impur-
"ities from the hide, such as 'scud' *lime*, and all "other foreign matter that hides are likely to

"collect, *and without the removal of which it is* "*impossible to make a perfect article.*" So far as a use of the "sour" is concerned, the circumstance that it injured the hides, may have been the "circumstance" that "required" a "departure" from the patent in declining to use the "sour." Injury to the hides may have been the "circumstance" that "required" a "departure" from the Coupe patent by the defendants in declining to use the bath of carbolic acid and water which the patent provides for. The fact that the hides could not be softened in the drum with tubular shafts and hot air temperature was the "circumstance" that made the defendants "depart" from the Coupe patent in declining to use the drum and hot air. The fact that the parffine stuffing compound, although it was unlike the fish oils used in oil-tanning, and was non-oxidizable, was still not as efficient as a tar stuffing compound, was the "circumstance" that "required" the "defendants" to "depart" from the Coupe patent in the use of the parffine compound. The fact that *Royer's* machine, *Royer's* tar stuffing and *Royer's* treatment had become well known, and was all that was "required" in making a perfect article of the kind which the defendants found themselves "required" to make, was the "circumstance" that "required" the defendants

to "depart" from their patent *no "further" than to adopt a machine similar to Royer's machine, a tar stuffing similar to Royer's tar stuffing, and a treatment similar to Royer's treatment;* and the fact that they "departed" no "further from their patent than to adopt what Royer had invented, was doubtless because they had already exhausted themselves in trying to produce the required article without adopting Royer's apparatus and treatment, and found that they could not do it; and they therefore stopped their efforts by adopting a machine, and stuffing, and treatment, similar to Royer's, simply *because they had tried but could not get any "further" without such adoptions.*

We have spent so much time in criticising the testimony given by Mr. Coupe as a witness for the reason that he has undertaken to individually make a case for the defendants by his individual evidence. If his testimony as a witness is unreliable then there seems to be no excuse for holding that there was anything in the state of the art to justify the Circuit Court in giving the patent a narrow construction. We trust that we have shown that after allowing to Mr. Coupe's evidence all that it can be entitled to that there is no reasonable excuse for so construing the patent. After all that can be gotten out of the testimony, the broad facts remain that after the Royer's ma-

chine patent of May 12th, 1868 was issued, Royer still continued his efforts alone, until he found that by using a stuffing with tar as one of its ingredients, and working the stuffing into the hides while fulling the hides in the machine mentioned that he, for the first time in the world, produced the article to which he gave the name of fulled rawhide; and that it was Royer and Royer alone who first essayed the treatment described in the patent; it was Royer and Royer alone who discovered that such a treatment with such a stuffing would produce the article so much desired, so long sought for, and which the tanning world believed could not be made.

Royer's invention had created a new industry. The defendants learned of and determined to appropriate to themselves this new industry. They endeavored to do so without adopting Royer's patented methods, and Mr. Coupe exhausted himself in devising methods by means of which he hoped to be able to make an appropriation of Royer's new industry. He however failed, and after so exhausting himself he fell back upon Royer's patented methods and has attempted to appropriate them. This is the whole story in a nut-shell.

There are some other witnesses who have testified on the part of the defendants, whose testimony

we have already referred to. The facts to which they testified are not of any importance.

The defendants have called, altogether, nine different witnesses. We have described the testimony of all but two of them. These two are Joseph A. Miller and Walter C. Tiffany, and they are merely professional experts. The testimony of Mr. Tiffany has probably been sufficiently presented. The testimony of Mr. Miller is of a very peculiar character, and it is not only irrelevant, but unless our education is much at fault as to what belongs to professional ethics, it is also grossly impertinent, and even insulting to the Court. Mr. Miller's testimony is in the record, from pages 100 to 118. As a witness he assumes the province of giving a construction to the patent under oath. He does not state facts within his own knowledge, so much as he presumes to take the testimony of the witnesses, apply it to the patent, and then give a construction to the patent.

Beginning with his answer to interrogatory 4, page 101, the witness states that *he* has examined and understands the patent; and *he* subsequently proceeds to inform the Court *how the patent should be construed.*

That the construction of a patent is purely a *question of law*, and belongs exclusively to the Court to determine is well settled.

Conover vs. *Roach*, 4 Fisher Pat. Cas., 12.
Day vs. *Stellman*, 1 *Ibid*, 487.
Johnson vs. *Root*, 1 *Ibid*, 351.
Heald vs. *Rice*, 104 U. S., 737.

In *Ely* vs. *Monson and B. M. Co.*, 4 Fisher, on page 76, the Court says:

"We must see how much the *opinions* of ex-
"perts *embody* questions of law as well as of
"fact, or whether they embrace in them any
"question of law. When a question of law is
"involved in the opinions of experts, that is not
"to be left to a jury; *and when the fact stated in-*
"*volves in effect the construction of a patent, that*
"*fact is founded on a question of law, and is of*
"*no force except as it embraces a question of law.*"

In *Burden* vs. *Corning*, 15 Howard, page 270, the U. S. Supreme Court says:

"The refusal of the Court to hear the opinion
"of experts as to the construction of the patent,
"was proper. Experts may be examined as to
"the meaning of terms of art, on the principle of
"*cuique in sua arte credendum*, but *not as to the*
"*construction of written instruments.*"

In *Waterbury Brass Co.* vs. *The N. Y. and B. Brass Co.*, 3 Fisher's Pat. Cas., on page 54, the Court says:

"Experts, gentlemen, have been introduced

" before you, who have given their opinion one " way or the other. The testimony of experts is " useful to show the operation of devices; indeed, " very essential. *But when experts undertake to " tell what the patent is for, they assume the duty " of the Court;* and when they undertake to say " what is or what is not a violation of the patent, " they not only assume the duty of the Court, but " of the jury."

We apologize to the Court for quoting authorities to sustain our position, elementary as it is, that the evidence of a witness cannot be received to tell what a patent is for or to give it a construction, and we would not have done so except for the character of expert testimony generally, and its especially unbridled nature in this case, and the fact that the Circuit Court gave the patent the construction which it did.

We refer to the testimony of the witness Miller as a further illustration of what we assert, to the effect that the defense are contesting this case upon theories in which, as intelligent men, they cannot themselves believe, and that their confidence of ultimate success, if they have any, is based upon their hope of imposing upon the Court with unfair testimony.

Mr. Miller tells us that the patent is for an improved mode or process of preparing rawhide for

belting; that the claim refers to the specification. And he then goes to the specification and divides the process up into eight steps, and quotes from the text of the specification. He then assumes to inform the Court that in the process described and claimed in the patent the use of lime, acids or alkali *must* be avoided. In short, *he examines the specifications of the patent and kindly informs the Court what the patent is for and how it must be construed.* He then goes further and examines the file wrapper contents which is in evidence, and under his oath as a witness, makes an argument for the defendant. On pages 105 and 106, he examines two other patents, to which he also gives a construction. On pages 107 and 108, he is handed a copy of the patent granted to John A. J. Shultz, No. 187,492, dated February 20, 1877, and is called upon *to state what effect that has as evidence* in indicating what the Patent Office had in its mind when it granted the Royer patent *several years before.* On page 108 he states that the investigation of the Shultz patent confirms him more strongly in the opinion which he had first expressed, that the Royer patent in suit must be confined to the successive steps to which he had first referred. He goes on and comments upon the testimony of Mr. Royer, and also says that he had read the testimony of William Coupe, and

understands the defendants' process *as Mr. Coupe has testified to it.* He also states how the defendants' process differs from the Royer process—*not from his knowledge of the two, but from his construction of the testimony* introduced in relation to them.

On page 106 of the Record Mr. Miller, in construing the Royer machine patent of 1868, says:

" The patent, therefore, describes a process for " treating hides which consists in fulling and soft- " ening the hide by mechanical means, and then " treating the so prepared hide with oil and tallow " by *forcing or stuffing the oil and tallow into the* " *hide by mechanical means,* which is the usual " way."

In this expression, Mr. Miller has stated what he must have known was not so. Stuffing oil and tallow into hides by mechanical means was *not* the usual way. On the contrary, the usual way was to apply the oil and tallow on the surface of hides that were already tanned and allow it to be absorbed by the hides. This never could be done with rawhides. There was, in fact, at that time, no usual way known of stuffing *dry* rawhides with oil and tallow. Rawhides would not absorb oil or tallow. Oil and tallow had only been worked into them by first allowing them to *absorb and become saturated with* water and then applying the

oil and tallow on to one side of the saturated hide, and then as the water dried out of the hide from one side the oil and water would be drawn in by capillary attraction from the other side and take the place of the water. It is true that this operation was facilitated by beating saturated and chemically tanned hides in the wet fulling machines and fulling stocks. But it could not be said with any considerable degree of truth that the oil and tallow was "stuffed" into the hides by mechanical means. In Royer's new treatment the stuffing is worked into the *dry rawhides* strictly by mechanical means *alone*. Until that treatment was inaugurated by Royer, long after the machine patents were granted, there never had been any stuffing worked into *dry* raw hides while there was any mechanical treatment of the hide taking place, and this attempt of the witness to make it appear that those machine patents worked the oil and tallow into the hides while the hides were being mechanically treated, may exhibit a high degree of "expertness," but it is done at the expense of a corresponding degree of truthfulness, and good faith to the Court. Those machine patents distinctly show that the mechanical treatment which they provide for, *was finished, totally and entirely before the treatment with oil and tallow commenced.* The patented treatment differs from the descrip-

tion contained in those machine patents, in that it not only has a different stuffing, but it works the stuffing into the hides *while the hides are being treated in the fulling machines*, while in those machine patents, the oil and tallow was not worked into the hides while they were being treated in the fulling machines. The new treatment produces fulled rawhide, while the treatment described in those machine patents did not.

After all that, Mr. Coupe, and his experts after him, have been able to extract from everything that had preceded the new Royer treatment, Mr. Miller, when he comes to compare Royer's new treatment with the defendants' treatment, is obliged to admit that "comparing the whole of "the two processes with each other, the *broad dis-* "*tinguishing feature between the two consists in that* "*the defendants' process depends upon the action of* "*the lime in the preparation of the hide*, while the "Royer patent lays particular stress upon avoid- "ing the use of lime, acid or alkali *in the prepara-* "*tion of the hide.*" Record last part page 112.

In making the statement above quoted the witness tells in almost so many words that the difference between the two processes, that is, between Royer's treatment and the defendants' treatment, is very slight, and not enough to make any "distinguishing feature" at all between

them. Royer prepares his hides by unhairing them by sweating and letting them dry. The defendants prepare their hides by the liming process, then washing every particle of the lime and all traces of it out of the hides, and then letting them dry. Our testimony proves that the hides in this condition are for all practical purposes identically the same as though unhaired by sweating and then dried. The witness speaks of the "action of the lime *in the preparation* of the "hide, while the Royer patent lays particular "stress upon avoiding the use of lime, acid or "alkali *in the preparation* of the hide." The *claim* of Royer's patent, however, is *not for the process of preparing the hide but it commences* with the treatment of the hide *after its preparation is finished.* The claim is for "the treatment of the *prepared* rawhide," etc. It is amply proved that the preparing of hides both by the process of sweating and drying, and also by the process of unhairing by liming and bating, or drenching—by which means *the lime and all traces of it are entirely removed from the hide*—are both old and well known methods of preparing rawhides. Since the claim of Royer's patent only *commences with the prepared* rawhide it ought to make no earthly difference in the construction of his patent by which of these well known methods the hide was prepared. In the

quotation from Miller's answer above made, he has, apparently unconsciously, called attention to the fact that the *distinguishing feature* between the *whole of the two* treatments was only in the choice of the two well known methods of preparing the hides, admitting indirectly thereby, *that after the hides were prepared, the treatment from that time forward was without any distinguishing feature.* On page 113, the witness admits that he never personally knew of rawhides being fulled with a dressing of tallow and tar, and admits, that in his former testimony, when referring to the use of tar and tallow on leather, *it referred to tanned leather only.*

The Circuit Court, as shown in its opinion, did not find any distinguishing difference between the patented treatment and the defendants' treatment, other than the difference between unhairing by sweating and unhairing by liming and then drenching the hide. Hence it was necessary, in order to avoid finding an infringement, to transpose the language of the claim and hold that the "treatment of the prepared rawhide" did not mean the unhaired hide which by being unhaired and dried was "prepared" for the first step in the new treatment, but that it meant the finished article after the treatment was entirely finished, and when nothing was to be treated. The word "pre-

pared" was in the claim and it referred to the "rawhide." It said that the invention was a treatment of prepared rawhide. It called it "*the* treatment"—"in the manner and for the purposes set forth"—"of the prepared rawhide." How can this mean any thing except that it was the treatment that the patent described of the rawhide that was prepared for such treatment as the patent described. The patent shows that the rawhide was unhaired and dried by a common well known method "familiar to every tanner." With what degree of reason can it be asserted that the patent should be construed to cover nothing but the unhairing process, and that all the treatment that was new, and all that comprised the new discovery, and all that was effectual in producing the new article of fulled rawhide was not covered by the patent, and that any one may lawfully use all of that *new* treatment without infringing the patent. The Court will readily see that if the hides are treated with the new treatment, *even without being unhaired at all*, that the new article of fulled rawhide will still be produced, although it will have the hair on it. If the patent had happened to have said: "After the hide is taken from the animal and the hair removed by sweating processes familiar to every one," would the skinning of the animal have been a part of the

claim? Is the entire invention to be thrown away because the patent happens to recite the fact that the patentee makes the fulled rawhide without the hair being left on the hides. This is about what the decision of the Circuit Court amounts to. The Court literally makes the invention end at the very point where it commenced.

One object in referring to the testimony of this witness, Miller, is to criticise it for the purpose of condemnation. The construction of a patent in every patent case is a duty that belongs exclusively to the Court. The consideration of the facts given in the testimony of the witnesses, which constitute the *res gestæ*, or state of the art; the consideration and comparing of that testimony with the patent for the purpose of determining the extent and limits of the invention; the determining of what the patent covers, and of what it fails to cover, as well as the determining of what is and what is not an infringement of the patent, are all matters that belong exclusively to the Court.

When, therefore, a witness undertakes to determine these things, or any of them, he is assuming the province of the Court, and when such witness is a mere employee of one of the parties, and is giving such testimony as such employee, he is trying, by illegitimate means, to influence the decision of the Court. What, we ask, is the difference

in principle, or in morals, between offering the Court a pecuniary consideration to influence its decision, or paying an expert that same consideration to go on the witness stand and swear that a construction of a character that is favorable to one party ought to be given to the patent which is in litigation, the evidence being given solely and only for the purpose of influencing the decision of the Court? If such testimony is competent, the Court is, of course, bound to consider it, and give to it whatever weight it carries with it. In giving it any weight at all, the Court is to that extent influenced in its decision the same as it would be in considering any other competent testimony on any other issue involved. If such testimony could be tolerated for a moment, the business of experts would become very much enlarged in patent cases; the time, in the trial of patent cases, would be largely consumed in taking the testimony of experts upon questions of law, as to what weight must be given to certain evidence; what legal bearing certain testimony has in expanding or limiting the claims of the patent in controversy; and the Court would be largely deprived of its judicial functions and left with nothing to do, except to decide *what the law was "according to the evidence."* Without further comment we leave

this testimony of Mr. Miller in the hands of the Court.

Royer's patent does not cover any chemical tanning treatment nor the tar stuffing as an article by itself, nor any treatment of *tanned leather*. Tanned leather, whether stuffed with a tar stuffing or not, was not the article that Royer was struggling to produce, and it is not the article that he finally did produce, nor is it an article which his patented treatment could produce, nor is it the article which the defendants are producing. Neither Royer nor the defendants are manufacturing or desire to manufacture or use tanned leather with tar stuffing.

While we have avoided quoting authorities for the reason that we are conscious of being in a court that is familiar with the rules of law belonging to this class of cases, we trust to being excused for making a very few references that are particularly in point. We do not do this with any idea that we are furnishing the Court with any new information, but we do it for the purpose of presenting our legal position to the opposite side, and challenging them to meet it with some other position more in their favor and more applicable to the case, if such a one exists.

The defendants have sworn, that until after Royer applied for his patent, and we think until after Mr. Coupe saw Royer's fulled rawhide at

Anton Heim's, in New York, they did not have any sufficient machine for dry milling the hides. This is so much legal evidence that they and others of whom they testify, who were equally destitute of effective dry fulling machines, could not and did not use the patented treatment, nor any treatment substantially like it.

In the case of *Eastern Paper Bag Co.* vs. *Standard Paper Bag Co.*, in 30 Federal Reporter, on page 66, this Court says:

"There was no real invention of the process until a machine was constructed to work the process." In this case reference is made to the case of *Union Manufacturing Co.* vs. *Lounsbury*, 2 Fisher, 389.

Referring to the case cited in 2 Fisher and we find the following declaration of the Court on page 393, viz.:

"The intellectual conception of a possible pro-
" cess without a potential working of it out, is not
" patentable. If an inventor merely conceives a
" mechanical process in his mind, and then sets
" to work to construct a machine to work that
" process, and works it out in no other way, and
" the machine fails to work successfully, then his
" claim as the inventor of a process is as ground-
" less as his claim as the inventor of a machine."

According to these authorities, and they are

axiomatic, the process, which constitutes a large part of Royer's patented treatment, was never performed until a machine had been made capable of doing the work. When, therefore, the defendants prove that there was no machine in existence capable of working the process, they prove that it never was worked until Royer did it. Not only this, but as the process was at the foundation of the treatment, and the fact that as there was no machine in existence that approximated to that particularly necessary kind of "boarding and breaking" operation required in the treatment until the Royers got up one, shows that the invention was radical, and that the patent is entitled to the very broadest kind of a construction.

Although probably not necessary, we will still notice Mr. Coupe's testimony on page 83 of the record; to the effect that Louis Royer had told him that he, Louis Royer, had used in San Francisco in 1863, a machine similar to the one described in the patent of 1868, No. 77,920. As the witness admits that this was only hearsay evidence, it is of course inadmissible. In the next place, Louis Royer was one of the patentees to whom the patent of 1868 was granted. Besides this the evidence shows that the machine that Louis Royer was trying to use in 1863 was not an operative machine. It had no end pressure for

the hides and proved a total failure for practical work; so much so that Louis Royer gave the entire scheme up and abandoned it from 1863 until Herman Royer took it up again in 1867. Record, from bottom of page 32 to page 38.

There is a case precisely in point, bearing upon the evidence given by the defendants as to their unhairing by liming, and then drenching the hides before drying them. It is the case already mentioned of *Tilghman* vs. *Proctor*, 102 U. S., 707.

In *Tilghman* vs. *Proctor*, the patent in suit was granted for the manufacture of fat acids. Its claim was—

"The manufacturing of fat acids and glycerine "from fatty bodies by the action of water at a "high temperature and pressure," page 721.

This case is a very instructive one in demonstrating what construction should be given to a patent of the nature of ours, where the patentee has accomplished a result never before accomplished, and in so doing has made the discovery, for the first time, that such a result was possible of accomplishment.

The case is even more applicable to the case at bar on the issue of infringement. In that case the patentee used only water in extracting the fat acids. The defendants added lime to the treatment; and then claimed that the operation was

different from the patented process; and that therefore they did not infringe. This Court, however, said, that they did infringe. On pages 731 and 732, the Court says:

"Another ground on which the defendants "argue that they do not infringe the patent is "that they do not, in their process, use water "alone in admixture with fat, *but use also some "portion of lime;* that they formerly used seven "per cent. of lime, and now use four per cent. "But they do not use lime in the manner and to "the extent in which it is used for dissolving "fats by the saponifying process. That requires "twelve or fourteen per cent. Even if the "saponifying process partly takes place, *they use "Tilghman's process for effecting the balance of the "operation.* They use water in admixture with "fat, heated to a high degree, far above the boiling "point, and yet subjected to such pressure as "to prevent the water from being converted "into steam: and *though they may also use other "things at the same time,* which other things may "facilitate the operation, or render a less degree "of heat necessary than would be required when "water alone is used, and thus actually improve "the process of Tilghman; *yet this process is in-"cluded in their operation, and forms the basis of it. "It is idle, therefore, to say that they do not infringe*

" Tilghman's patent. It is unnecessary to deter-
" mine what precise part the lime used by the
" defendants plays in their process; whether, as
" the complainant contends, it saponifies the fat
" to a certain extent, leaving the remainder to be
" acted upon by the water alone purely after the
" process of Tilghman; or whether, as the de-
" fendants contend, the lime produces a more
" perfect and active commixture of fat and water,
" or predisposes the fat to unite with the requisite
" elements of water necessary for producing gly-
" cerine and fat acids,—*in either case the process of*
" *Tilghman, modified or unmodified by the supposed*
" *improvement, underlies the operation performed in*
" *the defendants' boilers.*"

Although there are many other points in the evidence which might be pointed out in further detail that would strengthen the general views which we have taken of the case in this brief, we will not extend our criticisms further.

We are in the dark as to whether the defendants expect to use the testimony on this appeal so as to make an apparent defense out of it or not. As further authorities pertinent to the questions of novelty and infringement as shown by the testimony in this case, we cite the defendants to the following, viz:

Smith vs. *Goodyear Dental Vulcanite Company*, 93 U. S., 486.

Goodyear vs. *Wait*, 3 Fisher, 244.

Mowry vs. *Whitney*, 14 Wallace, 620.

Tilghman vs. *Werk*, 2 Fisher, 229.

Railway Co. vs. *Sayles*, 97 U. S., last five lines of page 556.

McCormick vs. *Talcott*, 20 Howard, first half of page 405.

Cochrane vs. *Deener*, 94 U. S., 780, particularly pages 786 and 787.

Telephone cases, 126 U. S., pages 532, 533.

Fermentation Co. vs. *Maus*, 122 U. S., pages 428, 429.

We respectfully submit that the decree of the Circuit Court in this case should be reversed.

M. A. WHEATON,
Counsel for Appellant.

146 U.S. 24

Office Supreme Court U. S.
FILED.
Nov 28 1892
JAMES H. McKENNEY,
CLERK.

Supreme Court of the United States

OCTOBER TERM, 1892.

TERM No. 82.

HERMAN ROYER, APPELLANT,

vs.

WILLIAM COUPE AND EDWIN A. BURGESS, COPARTNERS UNDER THE NAME AND STYLE OF WILLIAM COUPE & COMPANY.

Brief on Behalf of the Appellees

—BY—

WILMARTH H. THURSTON.

PROVIDENCE:
[illegible] & Co., Law Printers.

Supreme Court of the United States,

OCTOBER TERM, 1892.

TERM No. 82.

HERMAN ROYER, APPELLANT,

vs.

WILLIAM COUPE AND EDWIN A. BURGESS, COPARTNERS UNDER THE NAME AND STYLE OF WILLIAM COUPE & COMPANY.

BRIEF ON BEHALF OF THE APPELLEES.

This is a suit in equity for the alleged infringement of Letters Patent, No. 149,954, dated April 21, 1874, granted to the appellant for an "Improvement in the Modes of Preparing Rawhide for Belting." Royer Patent, Rec. p. 215.

The patent describes a process or mode of treatment for preparing rawhide, consisting of a series of steps which are set forth in the specification in the order in which they are successively performed.

The claim of the patent does not particularly point out

or enumerate the steps composing the process, but refers back to the specification for a statement thereof.

The claim is as follows:

> "The treatment of the prepared rawhide *in the manner* and for the purpose *set forth*."

The Defences.

The positions relied upon by the appellees are:

1. That the Royer patent is upon its face limited to a method or mode of treatment composed of each and all of the several steps set forth in the specification, and that to infringe said patent a person must make use of precisely the same method and employ each and all of the eight steps enumerated.

2. That the defendants do not employ such method, but on the contrary employ a process substantially different therefrom, and therefore do not infringe the patent.

3. That the appellant is estopped by his acts and conduct in the procurement of the patent from claiming any broader construction of the patent than that above indicated, or from claiming any construction of the patent which would include the process of the defendants.

4. That if any broader construction be put upon the patent, and unless it be limited as above, then the patent is anticipated, or at least is invalid as exhibiting no patentable subject of invention in view of the prior art.

Each of these positions was sustained by the Court below, the Court holding that the claim of the Royer patent was for the entire treatment or process described; that, if the patent was valid at all, it could only be sustained by limiting it to a method or treatment which included each and all of the steps described in the specification; and that the process of the defendants, which does not employ all of said steps, was consequently no infringement. Opinion, Rec. p. 239.

The same view of the Royer patent was taken by the Circuit Court for the Northern District of Illinois in the case of *Royer* vs. *Chicago Mfg. Co.* 20 Fed. Rep. 853, and again by the Circuit Court for the Eastern District of Missouri in the case of *Royer* vs. *Shultz Belting Co.*, 40 Fed. Rep. 159.

The case in the Northern District of Illinois was decided prior to the decision of the Circuit Court in the present case, and, so far as appears, the decision in that case was acquiesced in by the complainant. The case in the Eastern District of Missouri was decided since the decision in the present case.

For a right understanding of the issues involved, it will be desirable to refer at the outset to

The Prior State of the Art.

The Royer patent relates to the art of preparing leather, or, more strictly, of converting animal hides into leather, for practical and commercial uses. For very many years three different methods of converting hides into leather have been employed.

The first is what is known as the ordinary tanning method, which consists in combining with the rawhide any of the various vegetable tannins, the product being known as vegetable tanned, or bark tanned, or, more commonly, simply tanned leather.

The second method consists in combining with the rawhide certain minerals or chemicals, the product being commonly known as mineral tanned, or chemical tanned, or, sometimes, ~~tanned~~ tawed leather.

The third method consists in combining with the rawhide oils, fats, or grease, or compositions thereof, known in the trade as stuffing compounds, the product being known as grease or oil tanned leather, or rawhide leather, or often simply as rawhide. Coupe's Dep., p. 45. Int. 16; Tiffany's Dep., p. 186, Int. 8.

In practicing the third method referred to, that is, in preparing rawhide leather by the use of oils, fats, grease, etc., these substances, or the stuffing compounds made therefrom, are worked or stuffed into the hides by some mechanical means analagous to what is known in the arts

as fulling, and in speaking of this kind of leather it is commonly said to be prepared by fulling and stuffing, that is, by fulling the stuffing compound into the rawhide. Coupe's Dep., p. 45, Int. 16; Tiffany's Dep., p. 186, Int. 9.

It was formerly supposed that the grease, oils, or fats, were simply combined with the hide mechanically by being forced into the interstices thereof, but it has been proven and is now known to chemists, though not yet fully understood by many of the manufacturers or practical workers in the art, that in reality a chemical change takes place, and that the oil or grease unites with the gelatine of the hide, forming an insoluble compound, just as the vegetable tannins unite with the gelatine to form what is ordinarily known as tanned leather. Tiffany's Dep., p. 187, Int. 13; fr. 195, Int. 52, 53.

It is entirely proper, therefore, to speak of the product resulting from the third method of fulling and stuffing with grease as leather, or as oil or grease tanned leather, although from the fact that it was formerly thought that no chemical change took place, and that the hide still remained entirely raw, it happened that the manufacturers gave to this leather the name of rawhide to distinguish it from ordinary tanned leather. Mr. Coupe has usually spoken of it as "rawhide leather." Mr. Royer, when he came to manufacture it for the market, called it, from the fact that it was prepared by fulling, "fulled rawhide," though in the patent in suit it is spoken of throughout simply as "rawhide" or "prepared rawhide."

All of the methods for converting hides into leather

above referred to are very old in the art, long antedating the invention of Royer set forth in the patent in suit, and of them all, the third, or the method of fulling and stuffing with grease, is the oldest. It is in fact the method employed from the earliest times by primitive savages and the earliest civilizations, who are known to have prepared hides and skins for their wants and uses by the rubbing or pounding of fats, such as the brains or other fatty or oily portions of animals, into the rawhide by such rude appliances as stones or similar instruments. Tiffany's Dep., p. 186, Int. 10; Coupe's Dep., p. 48, Int. 33.

This is admitted by Royer in the specification which he originally filed, in which he says:

> "The process of making leather upon a sole mechanical principle is not new—it is essentially the mode of the Indians and other barbarous nations." Def't's' Exhibit Royer File Wrapper, Rec. p. 209.

It is with this third, or fulling and stuffing, method of converting hides into leather that the Royer patent in suit has to do. It is obvious from what has been said that Royer could not in 1872 lay claim broadly to the method of preparing rawhide by fulling and stuffing it with grease or fats. Any invention at that date must necessarily have been in the nature of an improvement upon the general method, and reside in the addition or modification of certain specific steps making up the process as a whole.

In this connection reference may be made to two prior patents granted to Royer, both of which disclose the broad process of converting hides into leather by fulling and stuffing with grease. These prior patents are No. 77,920,

Rec. p. 226, and No. 91,772, Rec. p. 228. Both of these patents relate to machines "for converting rawhides into leather," that is, to machines for performing the fulling or softening operation. Each of these patents states that the hides, in addition to being subjected to the fulling operation, are to be "treated with oil and tallow in the usual way." The usual way of treating rawhides with oil and tallow was by fulling or stuffing the oil or tallow into the hides. It is plain that both of these patents disclosed the process of converting a hide into leather by fulling and stuffing it with grease. Tiffany's Dep., p. 186, Int. 9; Coupe's Dep. p. 66, Int. 129, 130; Miller's Dep. p. 105, Int. 7.

Not only was the process of converting hides into leather by fulling and stuffing with grease an old process, but the use of various kinds of oils, fats, grease, etc., and the employment of a great variety of stuffing compounds, composed of varying combinations of ingredients, were also well known in the manufacture of leather and in carrying out the process referred to. Coupe's Dep., p. 57, Int. 85-90; p. 63, Int. 110.

Even the specific mixture of tallow, tar, and rosin was well known and had been previously employed as a stuffing compound. This is proven by abundant testimony, which it is unnecessary to refer to, because the fact has been admitted by Royer. When Royer first made application for the patent in suit, he claimed the use of a mixture of tallow, tar and rosin applied to hides made into leather by a mechanical process. He was told by the Patent Office that such a mixture was old in the art and had been applied to leather for similar purposes, and his claim was refused. Royer thereupon admitted that such

stuffing compound was not new with him, and withdrew his claim. Royer File Wrapper, pp. 209, 211. This admission he has repeated in his testimony in the present case. Rec. p. 27, Cross Int. 96.

Such was the prior art generally considered. We come now to examine the Royer patent, to ascertain what is the alleged invention described and claimed therein.

The Royer Patent.

The Royer patent in suit purports to be for a mode or method of preparing rawhide for belting. The method described commences with the hide in the condition in which it comes from the creature's back, with the hair on, and covers the entire preparation of the hide from that stage up to the completion of the finished product ready for the market. That finished product the patent calls "prepared rawhide." The process is a process of preparing rawhide, and the product of that process is prepared rawhide. Thus, speaking of the finished product, the specification, just preceding the claim, says, "Belts and lacing made of such prepared rawhide are in all respects stronger, etc."

The claim, to quote it again, is for "The treatment of the prepared rawhide in the manner and for the purposes set forth." This is plainly a claim to a process or method,

and has the same meaning as though it read, "The method of preparing rawhide in the manner set forth." It is further plain that the "prepared rawhide" of the claim is the finished product, and that what is meant to be claimed is the treatment or mode of treatment which results in such prepared rawhide.

The claim contains within itself no statement of what the process or method is which is sought to be covered, but simply refers back to the specification for a description thereof. Referring to the specification we find that it describes, step by step, the process which is claimed to be the subject of invention, the method or treatment described covering the entire preparation of the hide, and consisting of eight successive steps, as follows:

1. The removal of the hair from the hide by means of sweating.
2. Drying the hide perfectly hard.
3. Inserting the hard dried hide in water for ten or fifteen minutes.
4. Fulling or softening the hide by some mechanical means.
5. Spreading upon the hide in a warm, liquid state "a mixture of twenty parts tallow, two parts wood tar, and one part rosin."
6. Fulling or stuffing this mixture into the hide in a suitable machine.
7. Moistening the hide with water four or five times during the day.

8. Stretching the hide "the next day," and cutting into pieces suitable for belting.

It is a familiar rule that where the claim of a process patent enumerates the steps composing the process, each step so enumerated must be deemed essential, and as forming a part of the process patented. Where the claim of a process patent, instead of enumerating the steps composing the process, is for the treatment or method described or set forth in the specification, and refers to the specification for an understanding of what that method is, as in the present case, we submit that the same rule applies, and that each of the steps described or set forth in the specification is to be regarded as essential and a necessary part of the process or method claimed, and especially so where there is no declaration or suggestion that any of said steps is unimportant or can be omitted.

In the specification of the Royer patent there is no statement that any one of the eight steps described is unimportant or may be omitted. There is, however, an express statement that one of the steps described, the removal of the hair by means of sweating, is of the greatest importance and in fact absolutely essential.

There are two different methods of removing the hair from animal hides, one by means of sweating, known as the sweating process, and the other by means of lime, etc., known as the liming process. The specification of the Royer patent distinctly states that the hair is to be removed, in practicing the described process, *by means of sweating*. Not only that, but to make it absolutely certain

that the sweating process is to be employed, and not the liming process, the specification states: "In order to more fully understand *my mode of preparing hides, I avoid the use of lime, acid or alkali.*" This is an express statement that the use of lime, *i. e.* the liming process, for removing the hair, is to be avoided, and to further emphasize this fact, the specification proceeds to give the reasons why, as follows:

> "For just to the amount the hide is impregnated with such substances it suffers in its tensile strength and toughness; a slow but constant dissolution is going on with hides so impregnated. If the effects of the aforesaid substances are in some way neutralized, which must be a chemical one, the hide suffers again in this process. The power to resist abrasion and the extreme tensile strength for which pure rawhide is noted are irreparably lost."

Nothing could be more express or emphatic to show that the removal of the hair by means of sweating is a part, and an essential part, of the patented process.

We submit that the Royer patent is specifically limited upon its face to a process of preparing raw hides in which the removal of the hair by sweating, as distinguished from liming, constitutes one of the necessary and essential steps.

We further submit that each and all of the eight successive steps described in the specification are to be deemed and held to be important and essential, and that the patent is likewise limited upon its face to a process which includes the entire series of steps described.

So much for the patent upon its face. The conclusion as to the necessary limitation of the patent to the series

of steps described is confirmed and enforced by matters outside of the patent itself and especially by

The File Wrapper and Contents of the Royer Patent.

The File Wrapper of the Royer patent was introduced in evidence and will be found printed at pp. 207-214 of the record. A full analysis of the contents and the matters disclosed therein will be found in the testimony of Mr. Miller in answer to Int. 6, Rec. p. 102 *et seq.*

From an examination of the File Wrapper and of Mr. Miller's analysis, it will be seen that the applicant had great difficulty in finding any ground of novelty upon which to base a claim; that the application passed through a series of rejections and amendments, in the course of which the applicant made certain admissions which confirm what has been said as to the prior art, until finally the broad claims presented were all withdrawn, and the applicant, in response to a requirement of the Patent Office, presented and accepted the claim as issued.

The application, as originally filed, did not claim any method or mode of preparing rawhide, nor any process or method whatever. The claim originally presented was as follows, Rec. p. 209:

> "The use of a mixture of wood tar, rosin and tallow applied to hides made into leather by a mechanical process, substantially as and for the purpose hereinbefore set forth."

The applicant did not claim to have invented any new *process*, but merely sought to secure the *use* of the stuffing compound composed of tallow, tar and rosin upon hides made into leather by a mechanical process. The accompanying specification admitted, as already pointed out, that "The process of making leather upon a sole mechanical principle is not new," this being in effect an admission that the method of preparing rawhide leather by fulling and stuffing with grease or some suitable stuffing compound was old and well known.

In connection with this admission the specification further stated: "But the stuffing with the above named substances is new, and originates with myself." This shows that all that Royer at that time claimed to have invented, and all that he sought to secure, was the use of the particular mixture of tallow, tar and rosin, in place of the mixture of oil and tallow mentioned in his prior patents, that is, the substitution of one stuffing compound for another.

This claim was rejected. The letter of rejection stating that "The combination of ingredients set forth in the application above cited is found to have been applied to leather for similar purposes." Rec. p. 209.

Thereupon an amendment was filed by applicant in which, among other things, he cancelled the claim originally presented, and substituted in place thereof two claims, one to a process, and the other to a product, as follows, Rec. p. 210:

"First, the mode herein specified of preparing rawhides

> for machine belts, lacings or ropes, by the fulling and bending operation, and the preserving mixture, substantially as set forth.
>
> "Second, a belt or rope of rawhide prepared in the manner and with the materials specified, as a new article of manufacture."

It will be observed that the first of these claims was a broad claim to the process of fulling and stuffing with the particular mixture of tallow, tar and rosin, irrespective of any of the other steps described in the specification.

Both of these amended claims were rejected. The letter of rejection states, Rec. p. 211:

> "Upon further consideration of the matter above cited, in connection with the amendment of the 11th inst., it is apparent that the only feature of novelty presented, not embraced in applicant's original patent, granted May 12, 1868, is the addition of 'tar' and 'rosin' as ingredients to the compound for preserving leather."

The Office here referred to the prior patent to Royer, No. 77,920, and the position taken was that said prior patent described precisely the same process as that set forth in the process claim above quoted, so far as any *process* was concerned, and that the only difference was the addition of certain ingredients to the stuffing. This was exactly the fact. The addition of tar and rosin to the stuffing compound, however, in no way changed the *process* of converting hides into leather by fulling and stuffing with grease. Miller's Dep., p. 106, Int. 7; Tiffany's Dep., p. 195, Int. 48; Coupe's Dep., p. 67, Int. 131.

The applicant next wrote to the Office expressing himself aggrieved at the rejection of his application, and ask-

ing for a reconsideration. In this letter he says, Rec. p. 211:

> "The use of tallow and tar upon leather are admitted to be old, but rawhide fulled is not leather, and these materials act with the fulled rawhide very differently from what they do with leather, and the rawhide fulled and prepared with such material is superior to that prepared under his former patent."

In regard to this letter it is to be observed that the statement therein that "rawhide fulled is not leather" is not only incorrect, but is entirely inconsistent with all the prior statements of applicant with relation to the article produced. In the specification filed he not only referred to it repeatedly as leather, but expressly stated that it was leather. Thus, the specification described an "improved process of preparing leather." Then after describing the operation of the fulling machine it is stated that "this action produces what is termed leather." And again, "after the hide leaves the machine the second time it is thoroughly formed into leather." And the claimed originally filed was for the use of tallow, tar and rosin "applied to hides made into leather by a mechanical process." So in each of applicant's prior patents referred to it was stated that the fulling machines described were "for converting raw hides into leather."

These statements are correct, for, as we have shown, a rawhide which is fulled and stuffed with grease is converted into leather. Tiffany's Dep., p. 87, Int. 13.

Again, it is not a fact that tallow, tar and rosin act any differently upon leather made by a mechanical process

from what they do upon tanned leather. The action of these ingredients is in each case precisely the same. Miller's Dep., p. 109, Int. 12, 14; Coupe's Dep., p. 63, Int. 110. Tiffany's Dep. p. 194, Int. 44-46.

This was previously admitted by Royer when he acquiesced in the rejection of his claim broadly to the use of tallow, tar and rosin applied to hides made into leather by a mechanical process, and withdrew such claim.

The Office evidently understood this fact, and declined to accept the statement made by Royer that the stuffing compound of tallow, tar and rosin acted differently upon fulled rawhide from what it did upon any other kind of leather, for they still refused to give him the broad claim which he sought for a process consisting of only the two steps of fulling and stuffing with the mixture of tallow, tar and rosin, holding, as before, that that process was fully disclosed in his prior patent. On the contrary, the Office said to him, in effect, that the most he was entitled to, if anything, was a claim limited to the specific treatment composed of the series of steps described in the specification. The language of the Office letter is as follows, Rec. p. 212:

> "In response to attorney's letter of the 6th inst., in the application above cited, applicant is informed that a claim for the treatment of 'rawhide' in manner, etc., as described, independent of the process at present included, for which protection has already been granted, might receive favorable consideration."

This communication plainly means that the Office would not grant to Royer a claim for the broad process of

fulling and stuffing with tallow, tar and rosin; that such process was disclosed in his prior patent; and that the most he was entitled to was a claim for "the treatment of rawhide, in manner, etc., as described," that is, for the treatment, step by step, as described in the specification.

Royer immediately accepted the suggestion of the Office, acquiesced in the rejection of the broad claim, amended his specification as requested, withdrew the claim previously submitted, and substituted in place thereof the claim appearing in the patent.

We submit that not only is the Royer patent limited upon its face to a process composed of the series of successive steps described, but that the proceedings before the Patent Office, attending its procurement, confirm this construction, and show that the patent was required to be so limited.

Differences Between Sweating and Liming.

In his opening testimony, in the present case, Mr. Royer recognized that all of the steps described in his patent, including the removal of the hair by means of sweating, were included in the process claimed, and knowing that the appellees did not make use of all those steps, he attempted to claim that the appellees employed equivalents for the omitted steps, and particularly, that the liming process which the appellees employ for the removal of the

hair was an equivalent for the sweating process described in his patent. Royer's Dep., p. 20.

In view of this claim we took occasion to prove by abundant testimony that the liming and sweating methods are not equivalents; that each method operates upon the hide in an entirely different manner, and so as to leave the hide in an entirely different condition for the subsequent operations; and, finally, that the finished product in each case is distinguishably different.

As Mr. Royer, however, in his testimony in reply, returns to the position taken in his patent, and admits that the two methods are not equivalents, it will not be necessary to consider this testimony at any length, and we will simply call attention to the differences in the results of the two methods which affect or have a bearing upon the subsequent operations of the process of the Royer patent.

A full description of the two methods of liming and sweating will be found in the testimony of Mr. Coupe, Ints. 64 and 72, Rec. pp. 54, 55, and the differences between the two methods are fully pointed out in his answer to Int. 62, Rec. p. 53. See also Tiffany's Dep., p. 188, Int. 16.

The differences between a limed hide and a sweated hide are likewise fully described in the testimony. Coupe's Dep., p. 53, Int. 63; Tiffany's Dep., pp. 188–190, Int. 16, 22.

From this testimony it will appear that sweating is a decomposing or rotting process, while liming is a chemical

process, the lime acting to distend or expand the fibres of the hide. It will further appear that the liming process not only distends the fibres, thereby loosening the hair, but it also destroys the fatty matter which is contained in the hide, dissolves the albumen at the roots of the hair, prevents the hide from again agglutinating, and leaves the hide in a condition to have all the impurities or undesirable substances worked out. The sweating process does not accomplish these results, but leaves in the hide the insoluble fats and albuminous substances, which, when the hide is dried, form a hard, shelly, or glutinous substance which is insoluble in water, and through which it is difficult to force the stuffing.

These differences between a limed hide and a sweated hide are important in their effect upon the subsequent operations. A limed hide even when dried is open, porous, and freed from impurities which have a tendency to harden or agglutinate, and is in a condition in which the stuffing may be applied before the hide is subjected to any fulling operation. A sweated hide, on the contrary, when dried is harder, its fibres are more closely compacted, and it is more or less impregnated with a hard, shelly, glutinous substance, all of which makes it so difficult for the stuffing to penetrate a sweated hide that it becomes necessary in practice to subject such sweated hide to a preliminary fulling operation before any stuffing is applied, for the purpose of breaking up the hard substance referred to and of loosening the fibres so that the stuffing can be worked into the hide. Miller's Dep., p. 108, Int. 11.

Upon referring to the process of the Royer patent, we

find that it embodies, as one of the steps described, this preliminary fulling operation prior to the application of the stuffing. This was made necessary because he was dealing with a sweated hide, and the fact that this step of preliminary fulling is included in the process, is evidence that the patent relates to a method, which includes, as one of its steps, the removal of the hair by means of sweating.

The patent further requires that the stuffing is to be applied in a warm, liquid state, and also that after the hide has been fulled and stuffed, it is to be moistened with water four or five times during the day, and left thus moistened until the next day before being stretched These requirements are also doubtless due to the peculiar character of a sweated hide and its close, compact condition, for they are not at all necessary with a limed hide, which, owing to its open, porous condition, may be stretched immediately upon coming from the fulling machine and without any moistenings in water.

It will be seen, therefore, that the differences between sweating and liming, and the results produced thereby, extend throughout the entire process, and materially change and modify the character of the process as a whole, the employment of the sweating method making necessary certain steps, viz. the preliminary fulling before the application of the stuffing, the application of the stuffing in a warm, liquid state, the repeated moistenings in water after the fulling and stuffing operations, and the postponement of the stretching until the next day, all of which are unnecessary and may be dispensed with when the hair is removed by means of liming.

That there are important differences between sweating and liming, and that a process which embodies liming as one of its steps, is a different process from that which embodies sweating as one of its steps, is proven by Royer's own testimony.

It was developed in cross-examination that Royer at first tried liming as a part of his process; that he couldn't make it work; that he abandoned liming and adopted sweating instead; and that the adoption of sweating made a difference in the process, and constitutes the difference between the process of his patent and the process which he at first tried by the use of liming. Royer's Dep., p. 26, Cross-Ints. 72, 76-79; p. 27, Cross-Int. 93; p. 28, Cross-Ints. 102-104.

We quote a portion of the testimony referred to:

> "Cross-Int. 72. Did you not say to me in your cross-examination in that case that you used then in 1880 a similar proportion of tar as in 1869, and that the only difference in your process was in the mode of removing the hair?
> "*Ans.* I think I did say something—such a thing."
>
> * * * *
>
> "Cross-Int. 93. And is it not a fact that the process was the same except that in the spring of 1870 you substituted sweating for chemicals in removing the hair?
> "*Ans.* That makes the difference."

When he comes to testify in reply, Mr. Royer abandoned altogether his claim that liming and sweating are equivalents. Instead, he proceeded to point out at length differences between them (p. 150, Int. 16); reiterates what he considers are objections to liming, and announces that

he maintains the position taken in his patent (p. 151, Int. 18); specifies certain further objections to liming (p. 153, Int. 24); admits that he doesn't even now know how to practice the liming method (p. 153, Int. 25); and finally repeats the admission made in his opening testimony that he had tried liming and couldn't make it work (p. 159, Int. 55). His language in this last answer is: "It is that fact that has prevailed upon me *to abandon liming as an unsuitable process*."

These statements from Royer's own lips of course directly contradict his previous claim that liming and sweating are equivalents. But the best and sufficient answer to any such claim is the patent itself, which pronounces them to be not equivalents by the express statement that liming is to be avoided.

The Defendant's Process.

The process employed by the defendants in the manufacture of rawhide leather is fully described in the testimony of Mr. Coupe, one of the defendants, in his answer to Int. 4, Rec. pp. 8 and 9.

A careful comparison of the two processes, the process of the Royer patent and the process employed by the defendants, will be found in the testimony of Mr. Coupe in answer to Int. 145, p. 71, and in the testimony of Mr. Miller, Int. 19, p. 112, in which the differences between the two process are fully pointed out.

An analysis of this testimony shows the following characteristic differences between the two processes.

In the defendants' process the hair is not removed from the hide by means of sweating, but instead by means of liming, which acts in an entirely different way, and produces radically different results, which have their effect upon the various subsequent steps of the process.

In the defendants' process the hide is not dried perfectly hard, and when brought to the fulling operation is never in the condition in which a hide would be which was first dried perfectly hard and then inserted in water for ten or fifteen minutes, but instead the hide is dried only nine-tenths dry, and is brought to the fulling operation in a pliable condition, thoroughly softened throughout by sufficient moisture. See also Tiffany's Dep., p. 193, Ints. 35–37.

In the defendants' process the preliminary fulling prior to the application of the stuffing is omitted altogether, and is made unnecessary by the fact that the hides are unhaired by liming instead of sweating.

In the defendants' process the stuffing is applied cold, and in a thick pasty condition, instead of in a warm liquid state, as in the Royer process, this difference also being one of the results of the fact that the hides are unhaired by liming instead of sweating.

In the defendants' process, the step of the Royer process which consists in moistening the hide four or five times during the day to prepare it for stretching on the following

day, is entirely omitted, and this step is likewise made unnecessary by the condition of the hide due to the fact that it has been limed instead of sweated.

Finally, the entire treatment of the hide in the defendants' process, from its nine tenths dry state, and including the stretching, is accomplished in one day instead of requiring two days for its completion, as in the Royer process. This also is made possible by the condition of the hide by reason of its having been limed instead of sweated.

Not only are the two processes entirely and radically different as processes, but, as would be expected to be the case, the resulting products are likewise entirely different, and have different qualities and characteristics due to the differences in the processes employed. Coupe's Dep., p. 58, Int. 78; Tiffany's Dep., p. 190, Int. 22.

That there is a difference between the process of preparing rawhide in which the hair is removed by liming, and the process in which the hair is removed by sweating, and that there is a corresponding difference in the products produced, is admitted, as we have seen, by Royer himself. The fact that Royer considers the sweating method essential and the liming method wholly unsuitable, and that the defendants prefer the liming method, is unimportant. The important fact is that there are, and are admitted to be, radical differences between the two processes and their resulting products.

The Question of Infringement.

It is plain, and requires no argument to show, that if the Royer patent be limited to a process embodying the entire series of steps described in the specification, the defendants' process, in which some of the steps are radically different from the corresponding steps described in the Royer patent, and in which some of the steps described are omitted altogether, is no infringement of said patent.

The single fact that in the defendants' process the hair is not removed by means of sweating, but is instead removed by means of liming, a method which is expressly excluded from the Royer patent, is sufficient to place the defendants' process outside of that patent.

It has been directly held that there can be no infringement of a process patent where one of the required steps is omitted, and in place thereof a step is employed which the patent expressly declares is to be avoided. *Cotter* v. *New Haven Copper Co.*, 13 Fed. Dep. 234.

We submit that the defendants' process, in which one of the required steps is omitted, and in place thereof a step employed which the Royer patent declares is to be avoided, and in which certain other steps are omitted altogether, and nothing substituted in their place, is no infringement of said patent.

That the defendants' process regarded as a whole was different from the process described in the Royer patent, and that if said patent were limited to the entire process

the defendants did not infringe, was recognized and admitted by the complainant at the hearing in the Court below. Under the proofs submitted there was no room for argument upon this point. It became necessary, therefore, for the complainant to devise some new theory as to the construction of the Royer patent.

As already pointed out, Mr. Royer, at the time of giving his opening testimony, evidently considered that his patent was limited to the process as a whole, including the removal of the hair by means of sweating, for his effort then was, in order to bring the defendants' process within the patent, to show that the steps of the defendants' process were equivalents for the steps of his process, and particularly that liming was an equivalent of sweating. Of course such a position was directly contradictory to the statements in the patent itself.

The defendants proved conclusively, not only that liming and sweating were not equivalents, but that the only similarity between the defendants' process and that described in the Royer patent consisted in the fact that in both processes the hide was fulled and stuffed with a stuffing compound which included tallow, tar and rosin.

The only way, therefore, in which the defendants' process could be brought within the Royer patent was by having the claim of said patent construed to be broadly for fulling and stuffing with a mixture of tallow, tar and rosin, irrespective of all of the other steps described in the specification, and it was consequently for such a construction of the claim that the complainant contended in the

Court below. The former contention that sweating and liming were equivalents was abandoned, and instead, a new and ingenious theory was advanced to the effect that the method or treatment *claimed* in the patent was not the entire treatment *described*, but only a portion of that treatment, or, in other words, that the claim did not include all of the steps described, but only a portion of those steps.

In support of this contention it was argued that the words "prepared rawhide" of the claim did not refer to the product of the entire process, but instead referred to the hide when brought to the condition in which it was ready for the fulling operation, and that the "treatment" of the claim consisted simply in taking the hide thus prepared and fulling it and stuffing it with the mixture of tallow, tar and rosin.

The manifest purpose of this contention was to so broaden the scope of the claim as to include the defendants' process. This is evident from the fact that it disregards altogether all those steps described in the specification which the defendants do not use, and takes into consideration only those steps which the defendants do employ. There is no foundation for any such position, either in the patent itself or in the proofs submitted, and it was plainly an afterthought born of the exigencies of the case.

With regard to this contention we submit:

1. That such broad construction of the claim is absolutely unwarranted, and, in fact, directly prohibited by the specification as it appears upon its face.

2. That the proceedings attending the procurement of the patent show that the patentee at one time presented precisely such a claim, that it was rejected, its rejection acquiesced in and the claim withdrawn, and he is consequently now estopped to set up such a construction of the claim of his patent.

3. That if such broad construction be given to the claim, it would be anticipated, or at least exhibit no patentable subject of invention in view of the prior art.

The patent upon its face purports to be for a mode of preparing rawhide for belting, and the specification describes a process consisting of a series of steps which covers the entire preparation of the hide, from the condition in which it comes from the animal's back with the hair on until it is cut into pieces suitable for belting. The claim is for the treatment of the prepared rawhide in the manner set forth, and there is no suggestion or intimation whatever that the claim is for any process less than the whole process described. The plain meaning of the claim is that it is for the mode or method of preparing rawhide described in the specification.

That the treatment or process sought to be covered by the patent includes the step of removing the hair by means of sweating is conclusively proven by the express statement in the specification, which reads, "In order to more fully understand *my mode of preparing hides*, I avoid the use of lime," etc.

As to the suggestion that the words "prepared rawhide"

in the claim do not refer to the finished product, but refer instead to the hide after it has been brought to the condition where it is ready for the fulling operation, the language of the specification is likewise a complete answer to such suggestion. Thus the specification states that the patentee is "aware that hides and skins have been prepared by a fulling or bending operation to render them pliable." This shows that fulling constitutes a part of the preparation of the hide, and that the hide is not "prepared" until *after* the fulling operation has been performed. Again the specification, after describing all the several steps of the process, including fulling and stuffing, and in speaking of the article which results from the performance of all those steps, says: "Belts and lacing made of such *prepared hide* are in all respects stronger," etc. "Prepared hide" in this connection clearly means the product of the entire process.

We submit that the words "prepared rawhide" in the claim have the same meaning, and refer to the finished product, and that the only consistent construction of the claim is that it means the same as though it read, "The mode of preparing rawhide in the manner set forth."

But even if the words "prepared rawhide" in the the claim had the meaning which the complainant contends for, it would not relieve him from his embarrassment, nor serve to bring the defendants' process within the scope of claim, for two reasons.

In the first place the patent requires that the hair is to be removed by means of sweating, and it is immaterial

whether this step be regarded as a part of the preliminary preparation of the hide, or as a part of the treatment or process as a whole. It is a step which must be performed, and if " prepared rawhide " in the claim means what the complainant now contends, then the claim must be construed as though it read, "The treatment of the rawhide prepared by having the hair removed by means of sweating, etc., in the manner set forth." The defendants do not treat any rawhide so prepared.

Again, even if the " treatment " of the claim included only those steps which are performed after the hide has been made ready for the fulling operation, it nevertheless would include all of those subsequent steps, including the preliminary fulling, the application of the stuffing in a warm liquid state, the repeated moistenings in water after the fulling was completed, and the leaving of the hide in its moistened condition until the next day before stretching. The defendants do not employ any of these steps.

The second reply to the contention that the claim of the Royer patent is to be construed broadly as being for a process consisting of only the two steps of fulling and stuffing with a mixture of tallow, tar and rosin, is that the patentee is estopped to make any such contention by reason of his acts and conduct in connection with the procurement of the patent.

The claim so construed would be, not only substantially, but precisely, such a claim as the proceedings attending the procurement of the patent show was presented

by the applicant, rejected, and withdrawn. The claim so presented was as follows, Rec. p. 210:

> "The mode herein specified of preparing rawhides for machine belts, lacing and ropes, by the fulling or bending operation and the preserving mixture, substantially as set forth."

This was plainly a claim to the process of preparing rawhides which consists in fulling and stuffing with tallow, tar and rosin, which was the preserving mixture described. This claim was rejected on reference to the prior Royer patent, No. 77,920. A reconsideration was asked for, but the rejection was insisted upon.

Thereupon the applicant withdrew the claim and substituted the claim appearing in the patent, a claim which we submit is limited, and was intended to be limited, to the precise process or treatment set forth in the specification including each and all of the successive steps described. He is therefore estopped now to reclaim what was thus rejected and withdrawn. Having been required to limit his claim in order to secure his patent, he is now estopped from setting up such a construction of the claim which was finally granted as to make it co-extensive with the claim which was thus rejected and withdrawn. *Shepard* v. *Carrigain*, 116 U. S. 597; *Koemer* v. *Peddie*, 132 U. S. 317, and cases cited.

Finally, if the claim of the Royer patent be given the broad construction contended for, it would be substantially anticipated by the prior art, or at least would exhibit no patentable subject of invention.

The claim thus broadly construed would be for a process which, as a process, is as old as the art of converting hides into leather. So far as any process is concerned the claim as construed would be for nothing more nor less than the ancient process or method of fulling and stuffing with grease. The antiquity of this method is fully proven. Tiffany's Dep., p. 186, Int. 10; Coupe's Dep., p. 48, Int. 33.

As a specific instance of the employment of this old method of fulling and stuffing with grease the defendants also proved the manufacture of rawhide leather by such method at the establishment of James Davis at Pawtucket, R. I., in 1862 or 1863. McKelvey's Dep., p. 91, Ints. 21-26.

Royer's own admissions, however, are entirely sufficient for the purposes of this case. In the prior patents to himself, No. 77,920 and No. 91,772, he not only discloses such method, but recognizes it to be old, and in the application originally filed for the patent in suit he expressly admitted it to be an old and well known method.

It is sufficient, therefore, in this connection to refer, as did the Patent office, to the prior patents to Royer as exhibiting a full or substantial anticipation of the claim of the patent under the broad construction contended for.

As pointed out by the Patent Office, the broad process of fulling and stuffing with tallow, tar and rosin, was substantially anticipated by the prior Royer pat-

ent, No. 77,920, which disclosed the process of fulling and stuffing with tallow and oil, which was precisely the same process so far as any process was concerned. The only difference in one case as compared with the other, was simply the addition of tar and rosin as ingredients of the stuffing compound. This would in no way change the process as a process. In both cases the hide is converted into leather by being fulled and stuffed with a stuffing compound. The only change was the use of a mixture of tallow, tar and rosin, in place of a mixture of tallow and oil, that is, the substitution of one stuffing compound for another. Tiffany's Dep., p. 195, Int. 49 Cooper's dep. p. 67, Int. 131, 132; Royer's dep. p.

Now this is just what Royer understood he [illegible], for when he first made application for his patent he did not claim to have invented any new process, but he claimed simply "the use of a mixture of wood-tar, rosin and tallow applied to hides made into leather by a mechanical process." But he was told, and subsequently admitted, that such a mixture was old, and had been previously applied to leather for a similar purpose. He thereupon withdrew the claim, and then by amendment tried to get a claim for the mode of preparing a hide by fulling and stuffing with the mixture referred to. This claim was rejected, on the ground that it was substantially anticipated by his prior patent, which disclosed the same process, it being held that the addition of tar and rosin to the stuffing compound did not in any way change the process as a process, or constitute any patentable subject of invention. This position of the Office Royer admitted to be correct by withdrawing the claim. If the claim of the

patent as issued be given the broad construction contended for, it would be invalid for the same reason.

Again, the claim so construed would exhibit no patentable subject of invention for still another reason. It is proven and is admitted that the use of a mixture of tallow, tar and rosin as a stuffing compound on leather was old. To make use, therefore, of a mixture of tallow, tar and rosin in place of a mixture of tallow and oil, would be merely the substitution of one well known stuffing compound for another. The preparation of rawhide leather by means of fulling and stuffing with a stuffing compound, such as tallow and oil, being old, and the use of a stuffing compound composed of tallow, tar and rosin being old in the manufacture of leather, it certainly would require no invention to substitute one of these well known stuffing compounds for the other in the manufacture of rawhide leather, especially when, as has been proven, the mixture of tallow, tar and rosin acts precisely the same, and no differently, when applied to rawhide leather, as it does when applied to any other kind of leather. Miller's Dep., p. 109, Ints. 12-14; Coupe's Dep., p. 63, Int. 110. Tiffany's Dep. p. 194, Ints. 44-46.

That the mixture of tallow, tar and rosin acts in the same manner, and produces the same results, when applied to rawhide leather as when applied to any other kind of leather, was admitted by Royer when he withdrew the claim originally filed, which was for the use of such mixture when applied to rawhide leather, as distinguished from other kinds of leather.

We submit that if the claim of the Royer patent be construed broadly for the process of fulling and stuffing with a mixture of tallow, tar and rosin, it would be substantially anticipated by the prior patents to Royer, and, further, that the claim so construed would exhibit no patentable subject of invention in view of the prior art, as being at the most only for the substitution of one well known stuffing compound for another, or for the application to one kind of leather of an old and well known stuffing compound which had previously been used upon another kind of leather, the result in both cases being the same. *Pennsylvania R. R. Co.* v. *Locomotive Truck Co.*, 110 U. S. 490; *Miller* v. *Foree*, 116 U. S. 22.

In conclusion, we have only to suggest that if Royer intended to claim only a part of the process described in his specification, he ought to have particularly pointed out and distinctly claimed that part.

The law requires that a patentee "shall particularly point out and distinctly claim the part, improvement or combination which he claims as his invention or discovery." Rev. Stat., Sec. 4888. *Western Electric Co.* v. *Ansonia Co.*, 114 U. S. 452.

Having failed to do this, and having taken the claim which he did, he is estopped to set up any other construction of the claim than that which it appears to have upon the face of the patent itself, by which alone the public are to be guided in ascertaining what the patentee claims as his invention.

In the present case the patentee is still further estopped to set up the construction for which he contends, by reason of the fact that during the progress of his application through the Patent Office he presented precisely such a claim, which was rejected, the rejection acquiesced in, and the claim withdrawn.

It is respectfully submitted that the decree of the Circuit Court should be affirmed.

WILMARTH H. THURSTON,

For Appellees.